ICOM®

SERVICE MANUAL

VHF FM TRANSCEIVER

IC-V8000

Icom Inc.

INTRODUCTION

This service manual describes the latest service information for the **IC-V8000** VHF FM TRANSCEIVER at the time of publication.

VERSION	SYMBOL	SUPPLIED MICROPHONE
Asia	SEA	HM-118N
C.S.America	CSA	HM-118TN
	CSA-1	HM-133V
U.S.A.	USA-2	
	USA-3	HM-118TAN

To upgrade quality, any electrical or mechanical parts and internal circuits are subject to change without notice or obligation.

DANGER

NEVER connect the transceiver to an AC outlet or to a DC power supply that uses more than 16 V. This will ruin the transceiver.

DO NOT expose the transceiver to rain, snow or any liquids.

DO NOT reverse the polarities of the power supply when connecting the transceiver.

DO NOT apply an RF signal of more than 20 dBm (100mW) to the antenna connector. This could damage the transceiver's front end.

ORDERING PARTS

Be sure to include the following four points when ordering replacement parts:

1. 10-digit order numbers
2. Component part number and name
3. Equipment model name and unit name
4. Quantity required

<**SAMPLE ORDER**>

1110003200 S.IC TA31136FN IC-V8000 MAIN UNIT 5 pieces
8810006050 Screw Icom screw E7 IC-V8000 Chassis 10 pieces

Addresses are provided on the inside back cover for your convenience.

REPAIR NOTES

1. Make sure a problem is internal before disassembling the transceiver.
2. **DO NOT** open the transceiver until the transceiver is disconnected from its power source.
3. **DO NOT** force any of the variable components. Turn them slowly and smoothly.
4. **DO NOT** short any circuits or electronic parts. An insulated turning tool **MUST** be used for all adjustments.
5. **DO NOT** keep power ON for a long time when the transceiver is defective.
6. **DO NOT** transmit power into a signal generator or a sweep generator.
7. **ALWAYS** connect a 50 dB to 60 dB attenuator between the transceiver and a deviation meter or spectrum analyzer when using such test equipment.
8. **READ** the instructions of test equipment thoroughly before connecting equipment to the transceiver.

TABLE OF CONTENTS

SECTION 1 SPECIFICATIONS

SECTION 2 INSIDE VIEWS

SECTION 3 DISASSEMBLY AND OPTION INSTRUCTIONS

SECTION 4 CIRCUIT DESCRIPTION

4-1 RECEIVER CIRCUITS 4-1
4-2 TRANSMITTER CIRCUITS 4-2
4-3 PLL CIRCUITS 4-3
4-4 POWER SUPPLY CIRCUITS 4-3
4-5 PORT ALLOCATIONS 4-4

SECTION 5 PARTS LIST

SECTION 6 MECHANICAL PARTS AND DISASSEMBLY

6-1 IC-V8000 6-1
6-2 HM-133V 6-3

SECTION 7 SEMI-CONDUCTOR INFORMATION

SECTION 8 BOARD LAYOUTS

8-1 HM-133V 8-1
8-2 LOGIC BOARD 8-2
8-3 MAIN UNIT 8-4

SECTION 9 BLOCK DIAGRAM

SECTION 10 VOLTAGE DIAGRAM

10-1 MAIN UNIT 10-1
10-2 LOGIC BOARD 10-2
10-3 HM-133V 10-3

SECTION 1 SPECIFICATIONS

■ GENERAL

• Frequency coverage :

Version	Receive	Transmit
[USA]	136.000–174.000 MHz*	144.000–148.000 MHz
[SEA]		140.000–150.000 MHz*
[CSA]		136.000–174.000 MHz*

*Specifications Guaranteed: 144–148 MHz only

• Type of emission : FM (F2D / F3E)
• Frequency stability : ± 10 ppm (–10˚C to +60˚C; +14˚F to +140˚F)
• Tuning steps : 5, 10, 12.5, 15, 20, 25, 30 or 50 kHz
• Antnna connector : SO-239 (50 Ω)
• Power supply requirement (negative ground) : 13.8 V DC (Operable voltage range: 11.7 to 15.9 V)
• Number of memory channel : 207 channels (including 6 scan edges and 1 call channel)
• Call channel : 1 channel
• Scanning mode : Full, Program, Priority, Memory, Channel, Skip, Tone, DTCS, Bank and WX
• Current drain (approx.) :

Transmit	High (75 W)	15 A
	Middle High (25 W)	9.0 A
	Middle Low (10 W)	6.0 A
	Low (5 W)	5.0 A
Receiving	Max. audio	1.0 A
	Stand-by	0.8 A

• Usable temperature range : –10˚C to +60˚C; +14˚F to +140˚F
• Dimensions (projections not included) : 150(W) × 50(H) × 150(D) mm; 5 29⁄32(W) × 1 31⁄32(H) × 5 29⁄32(D) in.
• Weight : 1.09 kg; 12.3 oz.; 38.4 oz

■ TRANSMITTER

• RF output power (at 13.8 V DC) : 75 W / 25 W / 10 W / 5 W (High / Middle High / Middle Low / Low)
• Modulation system : Variable reactance frequency modulation
• Maximum frequency deviation : Narrow: ±2.5 kHz*; Wide: ±5.0 kHz
• Spurious emissions : Less than –60 dB
• Microphone connector : 8-pins modular (600 Ω)

■ RECEIVER

• Receive system : Double conversion superheterodyne system
• Intermediate frequencies : 1st 21.7 MHz
2nd 450 kHz
• Sensitivity : 0.15 µV at 12 dB SINAD (typical)
• Squelch sensitivity : 0.08 µV at threshold (typical)
• Selectivity : Narrow; More than ±3.0 kHz at –6 dB, Less than ±9.0 kHz at –55 dB*
Wide; More than ±6.0 kHz at –6 dB, Less than ±14.0 kHz at –60 dB
• Spurious and image rejection : 60 dB (typical)
• Audio output power (at 7.2 V DC) : More than 2.0 W at 10% distortion with an 8 Ω load
• Ext. speaker connector : 3-conductor 3.5(d) mm (1⁄8”)/8 Ω

*[USA] version only

All stated specifications are subject to change without notice or obligation.

SECTION 2 INSIDE VIEWS

• MAIN UNIT

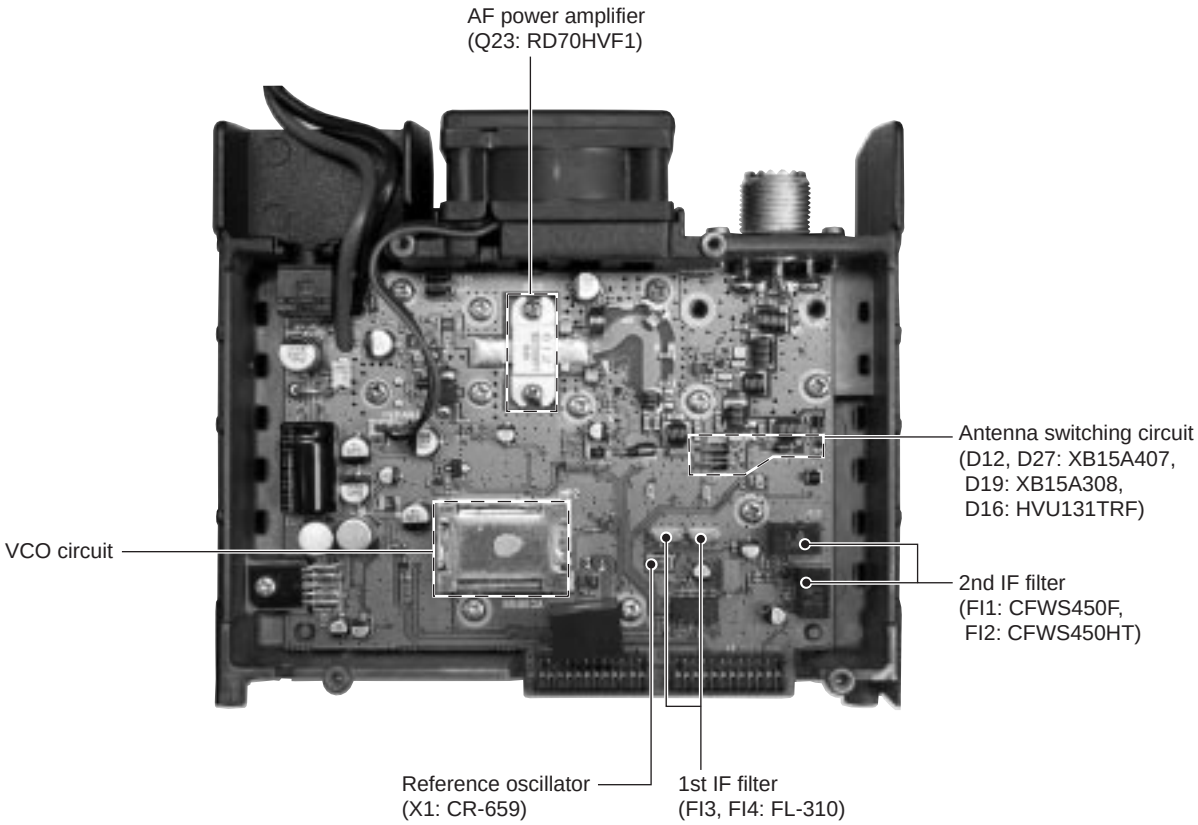

• LOGIC BOARD

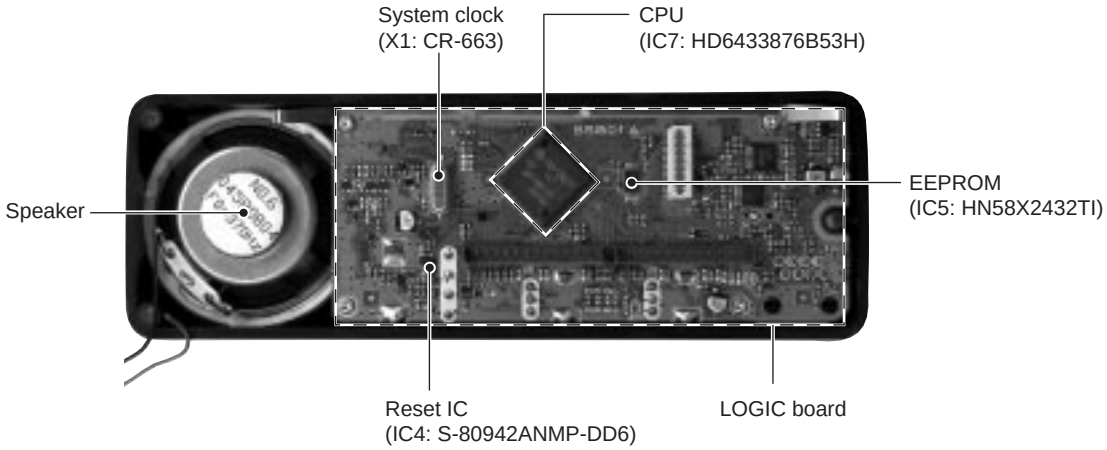

SECTION 3 DISASSEMBLY AND OPTION INSTRUCTIONS

• REMOVING THE COVER

① Unscrew 4 screws, MP10.
② Remove the cover in the direction of the arrow.

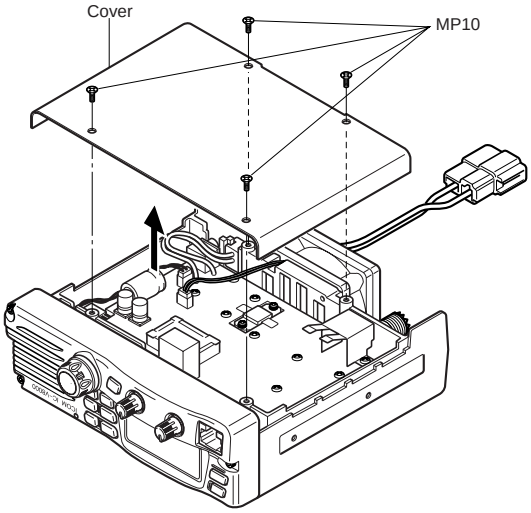

• REMOVING THE MAIN UNIT

① Unscrew 11 screws, MP6, and 2 screws, MP7, and 2 screws, MP4.
② Unsolder 3 points, Ⓐ, to remove the antenna connector.
③ Remove the Main unit in the direction of the arrow.

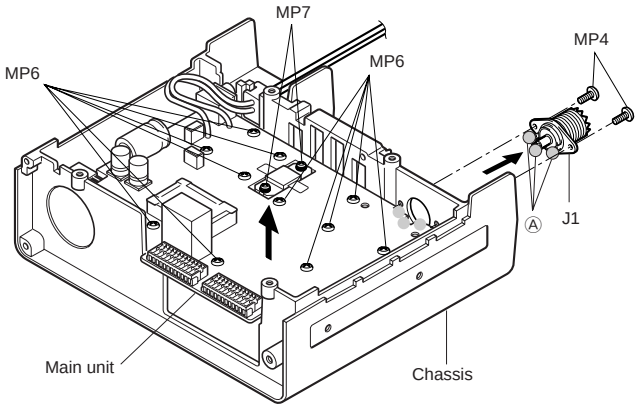

• REMOVING THE FRONT PANEL

① Unscrew 3 screws, MP9.
② Unplug J6 to separate front panel and chassis.
③ Remove the front panel in the direction of the arrow.
④ Unplug J5 to separate fan and chassis.
⑤ Unscrew 2 screws, MP6, to separate MP15 and chassis.

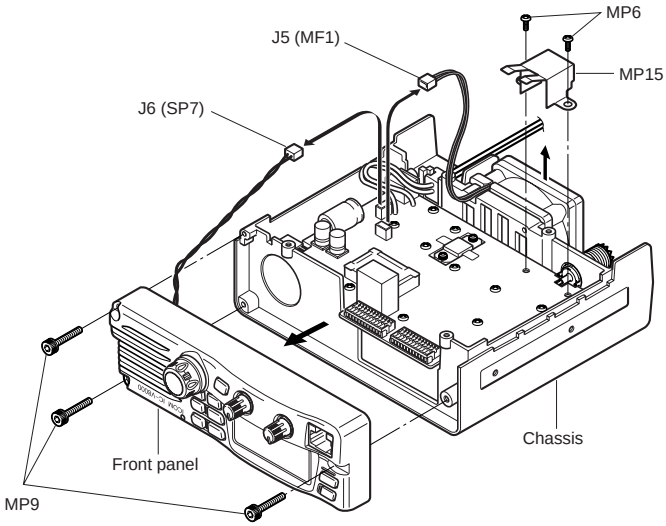

• OPTIONAL UNIT INSTALLATION

① Install the optional unit as illustrated below. Insert it tightly to avoid bad contact.

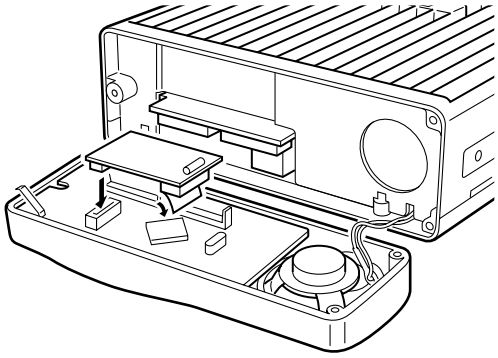

SECTION 4 CIRCUIT DESCRIPTION

4-1 RECEIVER CIRCUITS

4-1-1 ANTENNA SWITCHING CIRCUIT (MAIN UNIT)

Received signals passed through the low-pass filter (L44, L47, L48, L51, C190, C197, C203, C208, C210, C217, C218). The filtered signals are applied to the 1/4 λ type antenna switching circuit (D16, D19).

The antenna swtiching circuit functions as a low-pass filter while transmitting. However, its impedance becomes very high while D16 and D19 are turn ON. Thus transmit signals are blocked from entering the receiver circuits. The antenna switching circuit employs a 1/4 λ type diode swtiching system. The passed signals are then applied to the RF amplifier circuit.

4-1-2 RF CIRCUIT (MAIN UNIT)

The RF circuit amplifies signals within the range of frequency coverage and filters out-of-band signals.

The signals from the antenna switching circuit are applied to the limitter (D15), and are then passed through the bandpass filter (D13, L43, C183, C182). The filtered signals are amplified at the RF amplifier (Q27), then applied to the 1st mixer circuit after out-of-band signals are suppressed at the bandpass filter (D9–D11).

D9–D11, D13 employ varactor diodes that track the bandpass filters and are controlled by the T1–T3 signals from the D/A convertor (IC5, pins 10, 11, 23). These diodes tune the center frequency of an RF passband for wide bandwidth receiving and good image response rejection.

4-1-3 1ST MIXER AND 1ST IF CIRCUITS (MAIN UNIT)

The 1st mixer circuit converts the received signal to a fixed frequency of the 1st IF signal with a PLL output frequency. By changing the PLL frequency, only the desired frequency will pass through two crystal filters at the next stage of the 1st mixer.

The signals from the RF circuit are mixed at the 1st mixer (Q19) with a 1st LO signal coming from the VCO circuit to produce a 21.70 MHz 1st IF signal.
The 1st IF signal is applied to two crystal filters (FI3 and FI4) to suppress out-of-band signals. The filtered 1st IF signal is applied to the IF amplifier (Q16), then applied to the 2nd mixer circuit (IC4, pin 16).

4-1-4 2ND IF AND DEMODULATOR CIRCUITS (MAIN UNIT)

The 2nd mixer circuit converts the 1st IF signal to a 2nd IF signal. A double conversion superheterodyne system (which converts receive signal twice) improves the image rejection ratio and obtain stable receiver gain.

The 1st IF signal from the IF amplifier is applied to the 2nd mixer section of the FM IF IC (IC4, pin 16), and is mixed with the 2nd LO signal to be converted to a 450 kHz 2nd IF signal.

The FM IF IC contains the 2nd mixer, limiter amplifier, quadrature detector and active filter circuits. A 21.25 MHz 2nd LO signal is produced at the PLL circuit.

The 2nd IF signal from the 2nd mixer (IC4, pin 3) passes through a ceramic filter (FI1; When wide is selected, F2; When Narrow is selected. (Narrow is [USA] version only.)) to remove unwanted heterodyned frequencies. It is then amplified at the limiter amplifier (IC4, pin 5) and applied to the quadrature detector (IC4, pins 10, 11) to demodulate the 2nd IF signal into AF signals.

4-1-5 AF CIRCUIT (MAIN AND LOGIC UNITS)

The AF amplifier circuit amplifies the demodulated AF signals to drive a speaker.

AF signals from the FM IF IC (IC2, pin 9) are applied to the analog swtich (LOGIC UNIT; IC6, pin 1) via the high pass filter (IC3c, pins 9, 8). The output signals from pin 11 are applied to the volume adjustment pot (LOGIC UNIT; R31). The signals are applied to the AF power amplifier (IC9, pin 1) after passing through the AFmute swtich (Q29).

• 2ND IF AND DEMODULATOR CIRCUITS

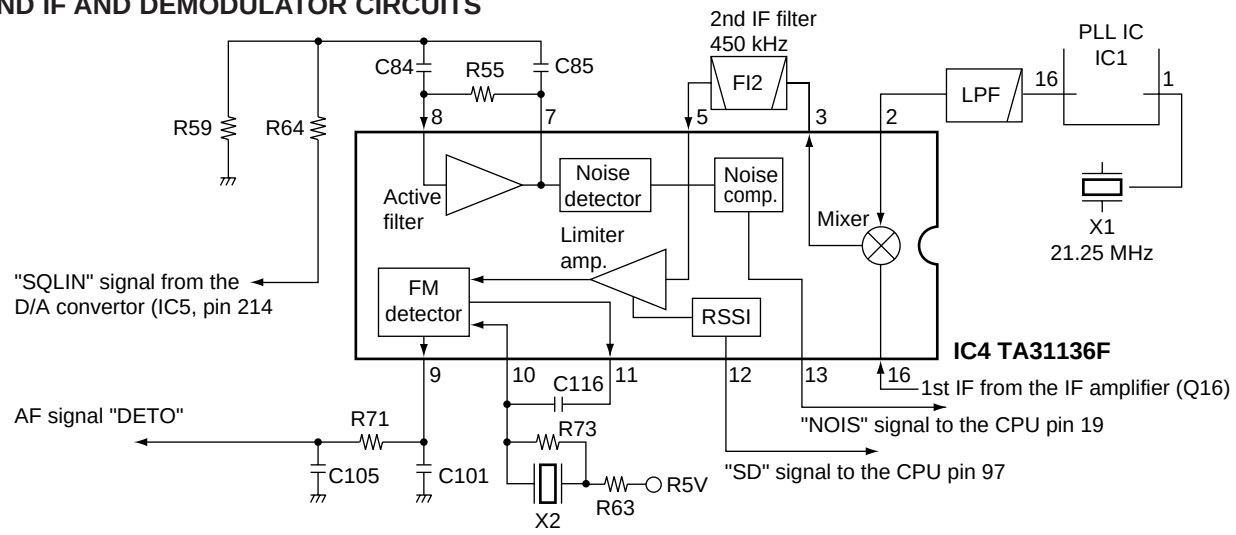

The AF signals are applied to the AF power amplifier circuit (IC9, pin 1) to obtain the specified audio level. The amplified AF signals, output from pin 4, are applied to the internal speaker (CHASSIS UNIT; SP1) via the speaker jack (J6) when no plug is connected to the external speaker jack (J1).

4-1-6 SQUELCH CIRCUIT (MAIN AND LOGIC UNITS)

A squelch circuit cuts out AF signals when no RF signals are received. By detecting noise components in the AF signals, the squelch switches the analog swtich.

A portion of the AF signals from the FM IF IC (IC4, pin 9) are applied to the D/A converter (IC5, pin 13) as the DETO signal. The signals from the D/A converter (IC5, pin 14) are applied to the FM IF IC active filter section (IC4, pin 8) where noise components are amplified and detected with an internal noise detector via the SQLIN line.

The trigger circuit converts the detected signals to a HIGH or LOW signal and applies this (from pin 13) to the CPU (LOGIC UNIT; IC7, pin 19) as the NOIS signal.The CPU controls the analog swtich IC (LOGIC UNIT; IC6) via the expander IC (LOGIC UNIT; IC8). When the CPU receives a HIGH level NOIS signal, the CPU controls the RMUT line to cut the AF signals at the analog swtich IC (LOGIC UNIT; IC6). At the same time, the AFON line controls the AF mute circuit (Q29) to cut out the VOLOUT signal for the AF power amplifier (IC9).

4-2 TRANSMITTER CIRCUITS

4-2-1 MICROPHONE AMPLIFIER CIRCUIT (LOGIC AND MAIN UNITS)

The microphone amplifier circuit amplifies audio signals with +6 dB/octave pre-emphasis from the microphone to a level needed for the modulation circuit.

The AF signals from the microphone pass through the MIC switch (IC2, D4) and high-pass filter (IC3a, pin 2), and are then applied to the microphone amplifier circuit (IC3d, pin 12) via the R39 and C47 for +6 dB/octave pre-emphasis. The amplified AF signals are applied to the analog swtich (IC6, pin 4), and are then applied to the D/A converter (MAIN UNIT; IC5, pin 1) via the MODIN signal. The AF signals are applied to the modulator circuit via the MOD signal.

4-2-2 MODULATION CIRCUIT (MAIN UNIT)

The modulation circuit modulates the VCO oscillating signal (RF signal) using the microphone audio signals.

The audio signals (SHIFT) change the reactance of D2 to modulate an oscillated signal at the VCO (Q6, D4). The oscillated signal is amplified at the LO (Q9) and buffer (Q11) amplifiers, then applied to the TX/RX switch circuit (D6, D7).

4-2-3 DRIVE/POWER AMPLIFIER CIRCUITS (MAIN UNIT)

The signal from the VCO circuit passes through the TX/RX swtiching circuit (D6) and is amplified at the pre-drive (Q17), drive (Q18, Q20) and power (Q23) amplifiers to obtain 75 W of RF power (at 13.8 V DC/typical). The amplified signal passes through the low-pass filter (L37, L39, C151, C156, C159, C167, C176, C227–C229), and then applied to the antenna swtiching circuit (D12). The signal is applied to the antenna connector (CHASSIS UNIT; J1) after being passed through the low-pass filter (L44, L47, L48, L51, C190, C197, C203, C208, C210, C217, C218).

The bias current of the drive (Q18, Q20) and power (Q23) amplifiers is controlled by the APC circuit to stabilize the output power.

4-2-4 APC CIRCUIT (MAIN UNIT)

The APC (Automatic Power Control) circuit (IC6a, Q26) protects drive and power amplifiers from excessive currents and selects HIGH or LOW output power.

The output voltage from the power detector circuit (D14, D17) is applied to the differential amplifier (IC6a, pin 2), and the “T3” signal from the D/A converter (IC5, pin 23) is applied to the other input for reference.

When the driving current increases, the input voltage of the differential amplifier (IC6a, pin 2) will be increased. In such cases, the differential amplifier output voltage (pin 1) is decreased to reduce the drive current.

Q26 is controlled by the TXC signal from the expander IC (IC2, pin 14) to select HIGH or LOW output power.

• APC CIRCUIT

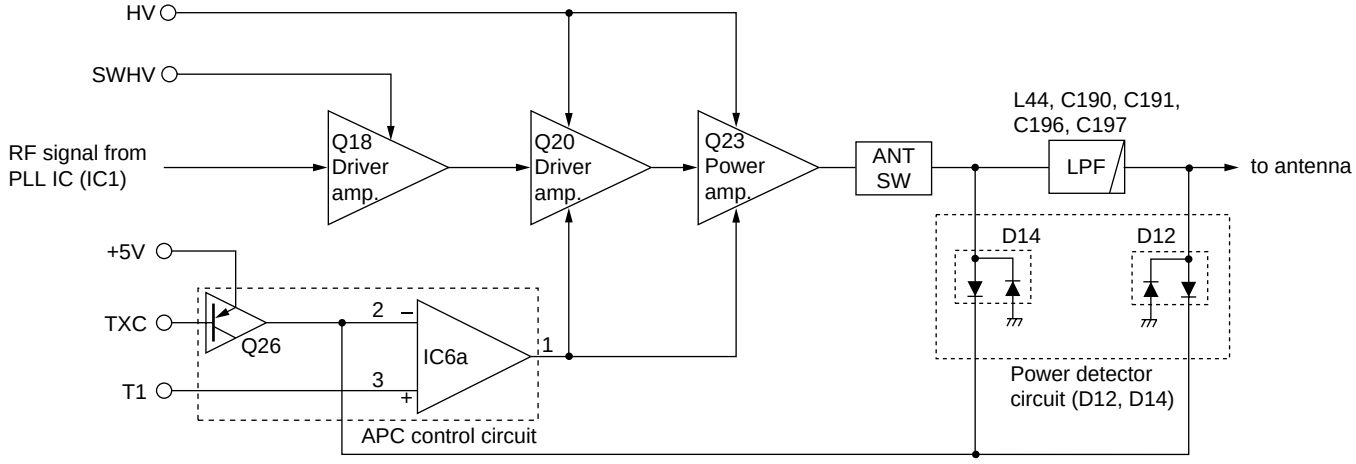

4-3 PLL CIRCUITS

4-3-1 PLL CIRCUIT (MAIN AND LOGIC UNITS)

A PLL circuit provides stable oscillation of the transmit frequency and receive 1st LO frequency. The PLL output compares the phase of the divided VCO frequency to the reference frequency. The PLL output frequency is controlled by the divided ratio (N-data) of a programmable divider.

An oscillated signal from the TX and RX-VCO circuits passes through the LO and buffer amplifiers (Q9, Q12) is applied to the PLL IC (IC1, pin 6) and is prescaled in the PLL IC based on the divided ratio (N-data). The reference signal is generated at the reference oscillator (X1) and is also applied to the PLL IC. The PLL IC detects the out-of-step phase using the reference frequency and outputs it from pin 15. The output signal is passed through the loop filter(Q2) and is then applied to the TX and RX-VCO circuits as lock voltage.

The lock voltage is also used for the receiver tunable bandpass filters to match the filter's center frequency to the desired receive frequency. The lock voltage is passed through the loop filter (Q2), and then applied to the DC amplifier (Q10). The amplified signal is applied to the CPU (LOGIC unit; IC7, pin 98) via the "LVIN" signal. The signal is analyzed at the CPU, and then applied to bandpass filters (D9–D11, D13) as "T1", "T2", "T3" signals via the D/A converter.

4-3-2 VCO CIRCUIT (MAIN UNIT)

The VCO circuit contains a separate TX-VCO (Q6, D2, D4) and RX-VCO (Q7, D5). The oscillated signal is amplified at the LO (Q9) and buffer (Q11) amplifiers, and is then Tx/Rx switching circuit (D6, D7). Then Tx and Rx signals are applied to the pre-driver (Q17) and 1st mixer circuit (Q19) respectively.

A portion of the signal from LO amplifier (Q9) is amplified at the buffer amplifier (Q12) and is then fed back to the PLL IC (IC1, pin 6) as the comparison signal.

4-4 POWER SUPPLY CIRCUITS

VOLTAGE LINE

LINE	DESCRIPTION
HV	The voltage from the power supply.
SWHV	The same voltage as HV line which is controlled by the HVSW circuit (Q28, Q30, Q31). When the [POWER] switch is pushed, the CPU outputs the "PWRON" control signal via the expander IC (IC2). The signal is applied to the HVSW circuit to turn the circuit ON. The output voltage is applied to the drive amplifier (Q18), +8V regulator circuit (IC7), etc.
C5V	Common 5 V for the CPU converted from the HV line by the C5V regulator circuit (IC8). The circuit outputs the voltage regardless of the power ON/OFF condition. The output voltage is applied to the EEPROM (LOGIC UNIT; IC5), CPU (LOGIC UNIT; IC7), etc.
+8V	Common 8 V converted from the 13.8 V line by the +8V regulator circuit (IC7). The output voltage is applied to the LO (Q9) and buffer (Q11) amplifiers, etc.
+5V	Common 5 V converted from the +8 V line by the +5V regulator circuit (Q21, Q22).
T8	Transmit 8 V controlled by the T8V regulator circuit (Q14, Q15) using the "TXC" signal from the I/O expander IC (IC2).
R5V	Receive 5 V controlled by the R5V regulator circuit (Q25) using "RXC" signal from the I/O expander IC (IC2). The output voltage is applied to the FM IC IC (IC4), IF (Q16) and RF (Q27) amplifiers, etc.

• PLL CIRCUIT

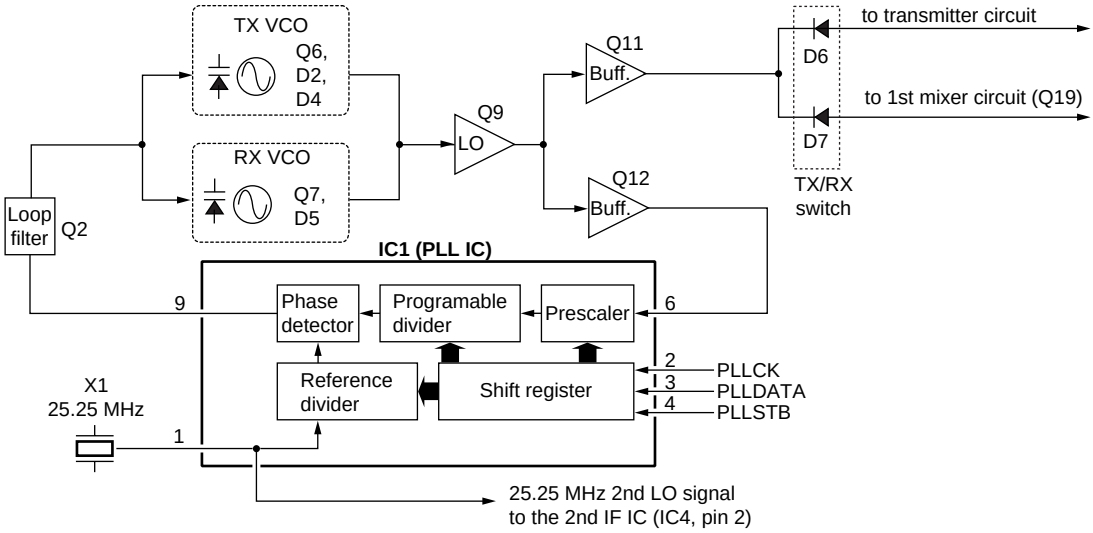

4-5 PORT ALLOCATIONS

4-5-1 CPU (LOGIC UNIT: IC7)

Pin number	Port name	Description
1	DETO	Input port for the weather alert signal detection.
9	RESET	Input port for reset signal.
11	CSHIFT	Outputs reference oscillator for the CPU control signal.
12	SCK	Outputs serial clock signal to the expander IC (MAIN unit; IC2, pin 3), D/A convertor IC (MAIN unit, IC5, pin 7), etc.
14	SO	Outputs serial signals to the D/A convertor IC (MAIN unit; IC5, pin 8),etc.
15	PTT	Input port for the [PTT] switch. High : While [PTT] switch is pushed.
16	CLIN	Input port for the cloning signal.
17	CLOUT	Outputs the cloning signal.
19	NOIS	Input port for noise signals (pulse type).
20	COLOR	Outputs LCD back light color control signal. Low : While choosing umber color.
21 22	DIM1 DIM0	Outputs LCD contrast control signal.
23	REMO	Input port for the remote signals from a remote microphone (HM-133V) via the [MIC] jack.
26	UNLK	Input port for PLL unlock signal from the PLL IC (MAIN unit; IC1, pin 14).
32–35	COM4–COM1	Outputs LCD common signals.
36–39	KR3–KR0	Input port for initial matrix. Low : While keys are pushing.
40	EXTMIC	Input port for the remote control microphone (HM-133V) connecting detection. Low : While HM-133V is connected.
41	OPV2	Input port for the optional unit detection signal.
44	PLLSTB	Outputs strobe signals to the PLL IC (IC1, pin 4).
45	PLLCK	Outputs PLL IC (IC1, pin 2) clock signal.
47	EXSTB OPV3	• Outputs strobe signal to the expander IC (IC2, pin 1). • Input port for the optional unit detection signal.
49–51	OPT1–OPT3	I/O port for optional unit control signal.
53	DUSE	Outputs low-pass filter cut-off frequency control signal when DTCS is activated.
54	ESCK	Outputs EEPROM (LOGIC unit; IC5, pin 6) clock signal.
55	ESDA	I/O port for the data signals from/to the EEPROM (LOGIC unit; IC5, pin 5).
56–88	SEG1–SEG32	Output LCD driver signals.
90	CTCC	Outputs CTCSS and DTCS tone signal.
91	TONE	Outputs DTMF, BEEP and 1750 Hz tone signal.
95	SQLV	Input port for the squelch level detection.
96	MICUD	Input port for the microphone up/down signal while connecting the microphone.
97	SD	Input port for the RSSI detection.
98	LVIN	Input port for the PLL lock voltage.
99	PDET	Input port for the power detector voltage.
100	TEMP	Input port for the transceiver's internal tempareture detection.

4-5-2 D/A CONVERTOR IC (MAIN UNIT: IC5)

Pin number	Port name	Description
2	MOD	Outputs transmit devetion control signal.
3	SQLATT	Outputs attenuator control signal.
10	T1	• Outputs tunable bandpass filter control signal while receiving. • Outputs TX power control signal while transmitting.
11, 23	T2, T3	Output tunable bandpass filter control signals.
14	SQLIN	Outputs squelch control signal.
15	DTC	Outputs DTCS's gradient control signal.
22	FC	Outputs reference frequency control signal to X1.

4-5-3 I/O EXPANDER IC (MAIN UNIT: IC2)

Pin number	Port name	Description
4 7 12	FANC1 FANC FANC2	Outputs cooling fan control signal. The fan speed is depended as shown below. **Fan speed** / **FANC** / **FANC1** / **FANC2** **Hi** / H / H / H **Middle** / H / L / H **Low** / H / H / L
6	AFMUTE	Outputs AF mute circuit control signal. High : While AF mute is ON.
11	SHIFT	Outputs TX and RX VCO's regulator control signals. High : While receiving. Low : While transmitting.
13	RXC	Outputs R5 regulator control signal. Low : While receiving.
14	TXC	Outputs TX power control signal. High : While transmitting.

SECTION 5 PARTS LIST

[LOGIC BOARD]

REF NO.	ORDER NO.	DESCRIPTION	
IC1	1110002860	S.IC	TA75S393F (TE85R)
IC2	1130004200	S.IC	TC4S66F (TE85R)
IC3	1110005340	S.IC	NJM12902V-TE1
IC4	1130009110	S.IC	S-80942ANMP-DD6-T2
IC5	1130009680	S.IC	HN58X2432TI
IC6	1130008090	S.IC	BU4066BCFV-E1
IC7	1140010400	S.IC	HD6433876B53H (FX-2509A)
IC8	1130007570	S.IC	BU4094BCFV-E2
Q1	1530002690	S.TRANSISTOR	2SC4116-GR (TE85R)
Q2	1590000430	S.TRANSISTOR	DTC144EUA T106
Q3	1590001650	S.TRANSISTOR	XP4601 (TX)
Q4	1590000430	S.TRANSISTOR	DTC144EUA T106
Q5	1590000660	S.TRANSISTOR	DTC144TU T106
Q6	1510000510	S.TRANSISTOR	2SA1576A T106R
Q7	1530002690	S.TRANSISTOR	2SC4116-GR (TE85R)
Q8	1530002690	S.TRANSISTOR	2SC4116-GR (TE85R)
Q9	1590000430	S.TRANSISTOR	DTC144EUA T106
Q12	1530002690	S.TRANSISTOR	2SC4116-GR (TE85R)
D1	1730002280	S.ZENER	MA8091-M (TX)
D2	1790001250	S.DIODE	MA2S111-(TX)
D3	1730002280	S.ZENER	MA8091-M (TX)
D4	1750000520	S.DIODE	DAN222TL
D6	1750000370	S.DIODE	DA221 TL
D7	1750000520	S.DIODE	DAN222TL
D8	1750000520	S.DIODE	DAN222TL
D9	1750000520	S.DIODE	DAN222TL
D13	1790001250	S.DIODE	MA2S111-(TX) [SEA], [USA] only
D15	1790001250	S.DIODE	MA2S111-(TX) [USA] only
D20	1750000520	S.DIODE	DAN222TL
D21	1750000520	S.DIODE	DAN222TL
D22	1790001250	S.DIODE	MA2S111-(TX) [SEA] only
D23	1790001250	S.DIODE	MA2S111-(TX) [SEA] only
D24	1790001240	S.DIODE	MA2S728-(TX)
X1	6050010870	S.XTAL	CR-663 (9.200 MHz)
R1	7030004780	S.RESISTOR	ERJ3GEYF 123 V (12 kΩ)
R2	7030009550	S.RESISTOR	ERJ3EKF 1203 V (120 kΩ)
R3	7030003560	S.RESISTOR	ERJ3GEYJ 103 V (10 kΩ)
R4	7030003560	S.RESISTOR	ERJ3GEYJ 103 V (10 kΩ)
R5	7030005521	S.RESISTOR	ERA3YKD 334V
R6	7030003680	S.RESISTOR	ERJ3GEYJ 104 V (100 kΩ)
R7	7030003320	S.RESISTOR	ERJ3GEYJ 101 V (100 Ω)
R8	7030003480	S.RESISTOR	ERJ3GEYJ 222 V (2.2 kΩ)
R9	7030003600	S.RESISTOR	ERJ3GEYJ 223 V (22 kΩ)
R10	7030003560	S.RESISTOR	ERJ3GEYJ 103 V (10 kΩ)
R11	7030003680	S.RESISTOR	ERJ3GEYJ 104 V (100 kΩ)
R12	7030003680	S.RESISTOR	ERJ3GEYJ 104 V (100 kΩ)
R13	7030003450	S.RESISTOR	ERJ3GEYJ 122 V (1.2 kΩ)
R14	7030003560	S.RESISTOR	ERJ3GEYJ 103 V (10 kΩ)
R15	7030003320	S.RESISTOR	ERJ3GEYJ 101 V (100 Ω)
R16	7030003660	S.RESISTOR	ERJ3GEYJ 683 V (68 kΩ)
R17	7030003660	S.RESISTOR	ERJ3GEYJ 683 V (68 kΩ)
R18	7210001860	VARIABLE	EVU-F2AF20 B14 (10KB)
R19	7030003440	S.RESISTOR	ERJ3GEYJ 102 V (1 kΩ)
R20	7030003440	S.RESISTOR	ERJ3GEYJ 102 V (1 kΩ)
R21	7030003660	S.RESISTOR	ERJ3GEYJ 683 V (68 kΩ)
R22	7030003440	S.RESISTOR	ERJ3GEYJ 102 V (1 kΩ)
R23	7030003680	S.RESISTOR	ERJ3GEYJ 104 V (100 kΩ)
R24	7030003580	S.RESISTOR	ERJ3GEYJ 153 V (15 kΩ)
R25	7030003560	S.RESISTOR	ERJ3GEYJ 103 V (10 kΩ)
R26	7030003320	S.RESISTOR	ERJ3GEYJ 101 V (100 Ω)
R27	7030003690	S.RESISTOR	ERJ3GEYJ 124 V (120 kΩ)
R28	7030003680	S.RESISTOR	ERJ3GEYJ 104 V (100 kΩ)
R29	7030003560	S.RESISTOR	ERJ3GEYJ 103 V (10 kΩ)
R30	7030003580	S.RESISTOR	ERJ3GEYJ 153 V (15 kΩ)
R31	7210001870	VARIABLE	EVU-F2AF20 A14 (10KA)
R32	7030003450	S.RESISTOR	ERJ3GEYJ 122 V (1.2 kΩ)
R34	7030003660	S.RESISTOR	ERJ3GEYJ 683 V (68 kΩ)
R35	7030003680	S.RESISTOR	ERJ3GEYJ 104 V (100 kΩ)

[LOGIC BOARD]

REF NO.	ORDER NO.	DESCRIPTION	
R36	7030003570	S.RESISTOR	ERJ3GEYJ 123 V (12 kΩ)
R37	7030003680	S.RESISTOR	ERJ3GEYJ 104 V (100 kΩ)
R38	7030003400	S.RESISTOR	ERJ3GEYJ 471 V (470 Ω)
R39	7030003700	S.RESISTOR	ERJ3GEYJ 154 V (150 kΩ)
R40	7030003640	S.RESISTOR	ERJ3GEYJ 473 V (47 kΩ)
R41	7030003570	S.RESISTOR	ERJ3GEYJ 123 V (12 kΩ)
R42	7030003800	S.RESISTOR	ERJ3GEYJ 105 V (1 MΩ)
R43	7030003800	S.RESISTOR	ERJ3GEYJ 105 V (1 MΩ)
R44	7030003800	S.RESISTOR	ERJ3GEYJ 105 V (1 MΩ)
R45	7030003510	S.RESISTOR	ERJ3GEYJ 392 V (3.9 kΩ)
R46	7410000950	S.ARRAY	EXB-V8V 102JV
R47	7030003680	S.RESISTOR	ERJ3GEYJ 104 V (100 kΩ)
R48	7030003800	S.RESISTOR	ERJ3GEYJ 105 V (1 MΩ)
R49	7030003610	S.RESISTOR	ERJ3GEYJ 273 V (27 kΩ)
R50	7030003800	S.RESISTOR	ERJ3GEYJ 105 V (1 MΩ)
R51	7030003200	S.RESISTOR	ERJ3GEYJ 100 V (10 Ω)
R52	7030003440	S.RESISTOR	ERJ3GEYJ 102 V (1 kΩ)
R53	7030003820	S.RESISTOR	ERJ3GEYJ 155 V (1.5 MΩ)
R54	7030003440	S.RESISTOR	ERJ3GEYJ 102 V (1 kΩ) [USA] only
R55	7030003440	S.RESISTOR	ERJ3GEYJ 102 V (1 kΩ) [SEA], [CSA] only
R56	7030004050	S.RESISTOR	ERJ3GEYJ 1R0 V (1 Ω)
R57	7030003580	S.RESISTOR	ERJ3GEYJ 153 V (15 kΩ)
R58	7030003680	S.RESISTOR	ERJ3GEYJ 104 V (100 kΩ)
R59	7030003580	S.RESISTOR	ERJ3GEYJ 153 V (15 kΩ)
R60	7030003650	S.RESISTOR	ERJ3GEYJ 563 V (56 kΩ)
R61	7030003650	S.RESISTOR	ERJ3GEYJ 563 V (56 kΩ)
R62	7030003650	S.RESISTOR	ERJ3GEYJ 563 V (56 kΩ)
R64	7030003800	S.RESISTOR	ERJ3GEYJ 105 V (1 MΩ)
R67	7030003560	S.RESISTOR	ERJ3GEYJ 103 V (10 kΩ)
R69	7030003560	S.RESISTOR	ERJ3GEYJ 103 V (10 kΩ)
R70	7030003630	S.RESISTOR	ERJ3GEYJ 393 V (39 kΩ)
R71	7030003560	S.RESISTOR	ERJ3GEYJ 103 V (10 kΩ)
R72	7030003720	S.RESISTOR	ERJ3GEYJ 224 V (220 kΩ)
R73	7030003740	S.RESISTOR	ERJ3GEYJ 334 V (330 kΩ)
R74	7030003700	S.RESISTOR	ERJ3GEYJ 154 V (150 kΩ)
R75	7030003660	S.RESISTOR	ERJ3GEYJ 683 V (68 kΩ)
R76	7030003590	S.RESISTOR	ERJ3GEYJ 183 V (18 kΩ)
R77	7030003530	S.RESISTOR	ERJ3GEYJ 562 V (5.6 kΩ)
R78	7030003680	S.RESISTOR	ERJ3GEYJ 104 V (100 kΩ)
R79	7030003520	S.RESISTOR	ERJ3GEYJ 472 V (4.7 kΩ)
R80	7030003440	S.RESISTOR	ERJ3GEYJ 102 V (1 kΩ)
R81	7030003690	S.RESISTOR	ERJ3GEYJ 124 V (120 kΩ)
R82	7030003440	S.RESISTOR	ERJ3GEYJ 102 V (1 kΩ)
R83	7030003300	S.RESISTOR	ERJ3GEYJ 680 V (68 Ω)
R84	7030003460	S.RESISTOR	ERJ3GEYJ 152 V (1.5 kΩ)
R85	7030003550	S.RESISTOR	ERJ3GEYJ 822 V (8.2 kΩ)
R86	7030003350	S.RESISTOR	ERJ3GEYJ 181 V (180 Ω)
R87	7410000950	S.ARRAY	EXB-V8V 102JV
R89	7030003390	S.RESISTOR	ERJ3GEYJ 391 V (390 Ω)
R91	7030003690	S.RESISTOR	ERJ3GEYJ 124 V (120 kΩ)
R92	7030003590	S.RESISTOR	ERJ3GEYJ 183 V (18 kΩ)
R93	7030003440	S.RESISTOR	ERJ3GEYJ 102 V (1 kΩ)
R94	7030003310	S.RESISTOR	ERJ3GEYJ 820 V (82 Ω)
R96	7030003630	S.RESISTOR	ERJ3GEYJ 393 V (39 kΩ)
R97	7030003340	S.RESISTOR	ERJ3GEYJ 151 V (150 Ω)
R99	7030003640	S.RESISTOR	ERJ3GEYJ 473 V (47 kΩ)
R100	7030003380	S.RESISTOR	ERJ3GEYJ 331 V (330 Ω)
R101	7030003520	S.RESISTOR	ERJ3GEYJ 472 V (4.7 kΩ)
R102	7030003410	S.RESISTOR	ERJ3GEYJ 561 V (560 Ω)
R103	7030003700	S.RESISTOR	ERJ3GEYJ 154 V (150 kΩ)
R104	7030003590	S.RESISTOR	ERJ3GEYJ 183 V (18 kΩ) [SEA], [CSA]
	7030003670	S.RESISTOR	ERJ3GEYJ 823 V (82 kΩ) [USA]
R105	7030003440	S.RESISTOR	ERJ3GEYJ 102 V (1 kΩ)
R106	7030003560	S.RESISTOR	ERJ3GEYJ 103 V (10 kΩ)
R107	7030003680	S.RESISTOR	ERJ3GEYJ 104 V (100 kΩ)
R108	7030003560	S.RESISTOR	ERJ3GEYJ 103 V (10 kΩ)
R109	7030003610	S.RESISTOR	ERJ3GEYJ 273 V (27 kΩ) [USA] only
R110	7030003440	S.RESISTOR	ERJ3GEYJ 102 V (1 kΩ)
R111	7030003590	S.RESISTOR	ERJ3GEYJ 183 V (18 kΩ)
C1	4030006860	S.CERAMIC	C1608 JB 1H 102K-T-A
C4	4030006860	S.CERAMIC	C1608 JB 1H 102K-T-A

S.=Surface mount

[LOGIC BOARD]

REF NO.	ORDER NO.	DESCRIPTION	
C5	4030007090	S.CERAMIC	C1608 CH 1H 470J-T-A
C7	4030006860	S.CERAMIC	C1608 JB 1H 102K-T-A
C8	4030006900	S.CERAMIC	C1608 JB 1H 103K-T-A
C9	4030006860	S.CERAMIC	C1608 JB 1H 102K-T-A
C10	4030006860	S.CERAMIC	C1608 JB 1H 102K-T-A
C11	4030006860	S.CERAMIC	C1608 JB 1H 102K-T-A
C13	4030006860	S.CERAMIC	C1608 JB 1H 102K-T-A
C14	4030006860	S.CERAMIC	C1608 JB 1H 102K-T-A
C15	4030006860	S.CERAMIC	C1608 JB 1H 102K-T-A
C16	4030006860	S.CERAMIC	C1608 JB 1H 102K-T-A
C19	4030006900	S.CERAMIC	C1608 JB 1H 103K-T-A
C20	4030006860	S.CERAMIC	C1608 JB 1H 102K-T-A
C23	4030006860	S.CERAMIC	C1608 JB 1H 102K-T-A
C28	4030006860	S.CERAMIC	C1608 JB 1H 102K-T-A
C30	4030007090	S.CERAMIC	C1608 CH 1H 470J-T-A
C31	4030007090	S.CERAMIC	C1608 CH 1H 470J-T-A
C32	4510004630	S.ELECTROLYTIC	ECEV1CA100SR
C33	4030011600	S.CERAMIC	C1608 JB 1E 104K-T-N
C34	4030009880	S.CERAMIC	C1608 JB 1H 682K-T-A
C35	4030008900	S.CERAMIC	C1608 JB 1H 333K-T-A
C36	4030011600	S.CERAMIC	C1608 JB 1E 104K-T-N
C37	4030006900	S.CERAMIC	C1608 JB 1H 103K-T-A
C38	4030009970	S.CERAMIC	C1608 JB 1H 182K-T-A
C39	4030006860	S.CERAMIC	C1608 JB 1H 102K-T-A
C40	4030006860	S.CERAMIC	C1608 JB 1H 102K-T-A
C41	4030011600	S.CERAMIC	C1608 JB 1E 104K-T-N
C42	4030008920	S.CERAMIC	C1608 JB 1H 473K-T-A
C43	4030008920	S.CERAMIC	C1608 JB 1H 473K-T-A
C44	4030008770	S.CERAMIC	C1608 JB 1H 562K-T-A
C45	4030006900	S.CERAMIC	C1608 JB 1H 103K-T-A
C46	4030008880	S.CERAMIC	C1608 JB 1H 223K-T-A
C47	4030011600	S.CERAMIC	C1608 JB 1E 104K-T-N
C48	4030006870	S.CERAMIC	C1608 JB 1H 222K-T-A
C49	4030011600	S.CERAMIC	C1608 JB 1E 104K-T-N
C50	4030007170	S.CERAMIC	C1608 CH 1H 221J-T-A
C51	4030008890	S.CERAMIC	C1608 JB 1H 273K-T-A
C52	4030007090	S.CERAMIC	C1608 CH 1H 470J-T-A
C53	4030007110	S.CERAMIC	C1608 CH 1H 680J-T-A
C54	4030006900	S.CERAMIC	C1608 JB 1H 103K-T-A
C55	4030006950	S.CERAMIC	C1608 CH 1H 040C-T-A
C56	4030006870	S.CERAMIC	C1608 JB 1H 222K-T-A
C57	4030008470	S.CERAMIC	C1608 JB 1H 272K-T-A
C59	4030007030	S.CERAMIC	C1608 CH 1H 150J-T-A
C62	4030006860	S.CERAMIC	C1608 JB 1H 102K-T-A
C64	4030006900	S.CERAMIC	C1608 JB 1H 103K-T-A
C65	4030006900	S.CERAMIC	C1608 JB 1H 103K-T-A
C66	4030006900	S.CERAMIC	C1608 JB 1H 103K-T-A
C67	4510004630	S.ELECTROLYTIC	ECEV1CA100SR
C68	4030011600	S.CERAMIC	C1608 JB 1E 104K-T-N
C69	4030011600	S.CERAMIC	C1608 JB 1E 104K-T-N
C70	4030006900	S.CERAMIC	C1608 JB 1H 103K-T-A
C71	4030006900	S.CERAMIC	C1608 JB 1H 103K-T-A
C72	4030008900	S.CERAMIC	C1608 JB 1H 333K-T-A
C73	4510005860	S.ELECTROLYTIC	ECEV1HA2R2SR
C74	4030008770	S.CERAMIC	C1608 JB 1H 562K-T-A
C75	4030011280	S.CERAMIC	C1608 CH 1H 271J-T-A
C76	4030008900	S.CERAMIC	C1608 JB 1H 333K-T-A
C77	4510005860	S.ELECTROLYTIC	ECEV1HA2R2SR
C78	4030006900	S.CERAMIC	C1608 JB 1H 103K-T-A
C79	4030007170	S.CERAMIC	C1608 CH 1H 221J-T-A
J1	6450002210	CONNECTOR	3017-8821 <AI>
J2	6510020880	CONNECTOR	53244-1217
J3	6510020880	CONNECTOR	53244-1217
J4	6510021970	S.CONNECTOR	AXN330C130P
DS1	5040001760	S.LED	SEC 2422C
DS2	5040001760	S.LED	SEC 2422C
DS4	5040001760	S.LED	SEC 2422C
DS5	5040001760	S.LED	SEC 2422C
DS7	5040001760	S.LED	SEC 2422C
DS8	5040001760	S.LED	SEC 2422C
DS10	5040001760	S.LED	SEC 2422C
DS11	5040001760	S.LED	SEC 2422C
DS13	5040002420	S.LED	SML-310MT T86
DS14	5040002420	S.LED	SML-310MT T86
DS16	5040002420	S.LED	SML-310MT T86
DS17	5040002420	S.LED	SML-310MT T86
DS18	5040002420	S.LED	SML-310MT T86
DS19	5030002250	LCD	L1-0256TAM

[LOGIC BOARD]

REF NO.	ORDER NO.	DESCRIPTION	
S9	2250000370	ENCODER	EVQ-VENF0124B
SP1	2510001150	SPEAKER	045P0804 <KS>
WS1	8600036880		FX2509 P01LO
EP1	6910012350	S.BEAD	MMZ1608Y 102BT
EP2	6910012350	S.BEAD	MMZ1608Y 102BT
EP3	6910012350	S.BEAD	MMZ1608Y 102BT
EP4	6910012350	S.BEAD	MMZ1608Y 102BT
EP5	6910012350	S.BEAD	MMZ1608Y 102BT
EP6	6910012350	S.BEAD	MMZ1608Y 102BT
EP7	6910012350	S.BEAD	MMZ1608Y 102BT
EP8	6910012350	S.BEAD	MMZ1608Y 102BT
EP9	8930057360	LCD CONTACT	SRCN-2509-SP-N-W
EP10	0910055312	PCB	B 5801B

[MAIN UNIT]

REF NO.	ORDER NO.	DESCRIPTION		
IC1	1130008350	S.IC	LV2105V-TLM	
IC2	1130007700	S.IC	BU4094BCF-T1	
IC4	1110003200	S.IC	TA31136FN (EL)	
IC5	1190000350	S.IC	M62363FP-650C	
IC6	1110005330	S.IC	NJM12904V-TE1	
IC7	1180001250	S.IC	TA7808F (TE16L)	
IC8	1180000420	S.IC	TA78L05F (TE12R)	
IC9	1110003090	IC	LA4425A	
Q1	1530002850	S.TRANSISTOR	2SC4116-BL (TE85R)	
Q2	1590001650	S.TRANSISTOR	XP4601 (TX)	
Q3	1530002850	S.TRANSISTOR	2SC4116-BL (TE85R)	
Q4	1530002850	S.TRANSISTOR	2SC4116-BL (TE85R)	
Q5	1530002850	S.TRANSISTOR	2SC4116-BL (TE85R)	
Q6	1530002920	S.TRANSISTOR	2SC4226-T1 R25	
Q7	1530002920	S.TRANSISTOR	2SC4226-T1 R25	
Q8	1590001040	S.TRANSISTOR	DTA113ZU T106	
Q9	1530003220	S.TRANSISTOR	2SC4406-4-TL	
Q10	1560000810	S.FET	2SK1069-4-TL	
Q11	1530003220	S.TRANSISTOR	2SC4406-4-TL	
Q12	1530003220	S.TRANSISTOR	2SC4406-4-TL	
Q13	1590000720	S.TRANSISTOR	DTA144EUA T106	[USA] only
Q14	1510000690	S.TRANSISTOR	2SA1734 (TE12R)	
Q15	1530002850	S.TRANSISTOR	2SC4116-BL (TE85R)	
Q16	1530003220	S.TRANSISTOR	2SC4406-4-TL	
Q17	1530000370	S.TRANSISTOR	2SC3356-T1B	
Q18	1560001100	S.FET	2SK3074 (TE12L)	
Q19	1580000660	S.FET	3SK272-(TX)	
Q20	1560001060	S.FET	2SK3075 (TE12L)	
Q21	1590001010	S.TRANSISTOR	DTB113ZK T147	
Q22	1590000430	S.TRANSISTOR	DTC144EUA T106	
Q23	1560001190	FET	RD70HVF	
Q25	1590001010	S.TRANSISTOR	DTB113ZK T147	
Q26	1590000720	S.TRANSISTOR	DTA144EUA T106	
Q27	1580000660	S.FET	3SK272-(TX)	
Q28	1530002970	S.TRANSISTOR	2SC4684 (TE16R)	
Q29	1530003090	S.TRANSISTOR	2SC4213-B (TE85R)	
Q30	1510000890	S.TRANSISTOR	DTA143TU T106	
Q31	1590001320	S.TRANSISTOR	DTC143ZUA T106	
Q32	1530002850	S.TRANSISTOR	2SC4116-BL (TE85R)	
Q33	1520000460	S.TRANSISTOR	2SB1132 T100 R	
Q34	1530002850	S.TRANSISTOR	2SC4116-BL (TE85R)	
D1	1790001250	S.DIODE	MA2S111-(TX)	
D2	1750000720	S.VARICAP	HVC375BTRF	
D3	1750000770	S.VARICAP	HVC376BTRF	
D4	1750000720	S.VARICAP	HVC375BTRF	
D5	1750000720	S.VARICAP	HVC375BTRF	
D6	1790000620	S.DIODE	MA77 (TX)	
D7	1790000620	S.DIODE	MA77 (TX)	
D9	1750000710	S.VARICAP	HVC350BTRF	

S.=Surface mount

[MAIN UNIT]

REF NO.	ORDER NO.	DESCRIPTION		
D10	1750000710	S.VARICAP	HVC350BTRF	
D11	1750000710	S.VARICAP	HVC350BTRF	
D12	1710001060	DIODE	XB15A407	
D13	1750000710	S.VARICAP	HVC350BTRF	
D14	1790000980	S.DIODE	MA742 (TX)	
D15	1750000550	S.DIODE	1SS355 TE-17	
D16	1710000870	S.DIODE	HVU131TRF	
D17	1790000980	S.DIODE	MA742 (TX)	
D18	1790001250	S.DIODE	MA2S111-(TX)	
D19	1710001080	DIODE	XB15A308	
D20	1730000520	ZENER	RD20E B2	
D21	1790000700	DIODE	DSA3A1	
D22	1790001520	S.ZENER	MA8075-L (TX)	
D23	1790001250	S.DIODE	MA2S111-(TX)	[USA] only
D24	1790001250	S.DIODE	MA2S111-(TX)	[USA] only
D25	1790001250	S.DIODE	MA2S111-(TX)	[USA] only
D26	1790001250	S.DIODE	MA2S111-(TX)	[USA] only
D27	1710001060	DIODE	XB15A407	
D28	1790000980	S.DIODE	MA742 (TX)	
D29	1750000370	S.DIODE	DA221 TL	
FI1	2020001520	CERAMIC	CFWLA450KFFA-B0 (CFWS450F)	
FI2	2020001460 [USA] only	CERAMIC	CFWLA450KHFA-B0 (CFWS450HT)	
FI3	2010002420	MONOLITH	21R15AB (FL-310)	
FI4	2010002420	MONOLITH	21R15AB (FL-310)	
X1	6050010800	S.XTAL	CR-659 (21.25 MHz)	
X2	6070000200	DISCRIMINATOR	CDBLA450KCAY24-B0	
L1	6200004480	S.COIL	MLF1608D R82K-T	
L2	6200002850	S.COIL	NL 252018T-R82J	
L3	6200001620	S.COIL	ELJFC 1R0K-F	
L6	6200009920	S.COIL	C2012C-R10G	
L7	6200009910	S.COIL	C6342A-88NG-A	
L8	6200004870	S.COIL	ELJFC 2R7K-F	
L9	6200004880	S.COIL	ELJFC 3R3K-F	
L10	6200001620	S.COIL	ELJFC 1R0K-F	
L11	6200006980	S.COIL	ELJRE R10G-F	
L12	6200006980	S.COIL	ELJRE R10G-F	
L13	6200006980	S.COIL	ELJRE R10G-F	
L14	6200006990	S.COIL	ELJRE 56NG-F	
L15	6200007000	S.COIL	ELJRE 82NG-F	
L18	6200005740	S.COIL	ELJRE 47NG-F	
L19	6200004920	S.COIL	MLF1608A 2R2K-T	
L20	6200005740	S.COIL	ELJRE 47NG-F	
L21	6200006980	S.COIL	ELJRE R10G-F	
L22	6200006670	S.COIL	ELJRE 68NG-F	
L23	6200005680	S.COIL	ELJRE 15NG-F	
L24	6200003590	S.COIL	EXCCL3225U1	
L25	6200003280	S.COIL	NL 252018T-2R2J	
L26	6200003280	S.COIL	NL 252018T-2R2J	
L27	6200003590	S.COIL	EXCCL3225U1	
L28	6200008260	S.COIL	0.30-1.7-8TL 60N	
L30	6200008490	S.COIL	0.30-0.9-3TR 7.5N	
L31	6200009930	S.COIL	C2012C-68NG	
L32	6200009930	S.COIL	C2012C-68NG	
L33	2040000490	COIL	EXC-ELDR25C	
L34	2040000490	COIL	EXC-ELDR25C	
L35	6110001680	COIL	LA-254	
L37	6200010040	S.COIL	AS100340-10N	
L38	6200009920	S.COIL	C2012C-R10G	
L39	6200010050	S.COIL	AS080547-47N	
L40	6170000180	COIL	LW-19	
L42	6200007370	S.COIL	ELJFC R82K-F	
L43	6200009750	S.COIL	0.30-2.0-7TL 68N	
L44	6200010050	S.COIL	AS080547-47N	
L45	6200008150	S.COIL	0.35-1.6-7TL 44N	
L46	6200010060	S.COIL	AS080647-56N	
L47	6200010070	S.COIL	AS080747-68N	
L48	6200010070	S.COIL	AS080747-68N	
L50	6200002910	S.COIL	NL 252018T-R27J	
L51	6200010050	S.COIL	AS080547-47N	
L52	6200002180	S.COIL	NL 252018T-R12J	
L53	6200005710	S.COIL	ELJRE 27NG-F	
R1	7030003640	S.RESISTOR	ERJ3GEYJ 473 V (47 kΩ)	
R2	7030003560	S.RESISTOR	ERJ3GEYJ 103 V (10 kΩ)	

[MAIN UNIT]

REF NO.	ORDER NO.	DESCRIPTION		
R3	7030003760	S.RESISTOR	ERJ3GEYJ 474 V (470 kΩ)	
R4	7030003300	S.RESISTOR	ERJ3GEYJ 680 V (68 Ω)	
R5	7030003520	S.RESISTOR	ERJ3GEYJ 472 V (4.7 kΩ)	
R6	7030003420	S.RESISTOR	ERJ3GEYJ 681 V (680 Ω)	
R7	7510001280	S.THERMISTOR	NTCCM20124AG473J-T	
R8	7030003680	S.RESISTOR	ERJ3GEYJ 104 V (100 kΩ)	
R9	7030003560	S.RESISTOR	ERJ3GEYJ 103 V (10 kΩ)	
R10	7030003640	S.RESISTOR	ERJ3GEYJ 473 V (47 kΩ)	
R11	7030003560	S.RESISTOR	ERJ3GEYJ 103 V (10 kΩ)	
R12	7030003320	S.RESISTOR	ERJ3GEYJ 101 V (100 Ω)	
R13	7030003490	S.RESISTOR	ERJ3GEYJ 272 V (2.7 kΩ)	
R14	7030003800	S.RESISTOR	ERJ3GEYJ 105 V (1 MΩ)	
R15	7030003730	S.RESISTOR	ERJ3GEYJ 274 V (270 kΩ)	
R16	7030003600	S.RESISTOR	ERJ3GEYJ 223 V (22 kΩ)	
R17	7030003720	S.RESISTOR	ERJ3GEYJ 224 V (220 kΩ)	
R18	7030003440	S.RESISTOR	ERJ3GEYJ 102 V (1 kΩ)	
R19	7030003550	S.RESISTOR	ERJ3GEYJ 822 V (8.2 kΩ)	
R20	7030003530	S.RESISTOR	ERJ3GEYJ 562 V (5.6 kΩ)	
R21	7030003380	S.RESISTOR	ERJ3GEYJ 331 V (330 Ω)	
R22	7030003440	S.RESISTOR	ERJ3GEYJ 102 V (1 kΩ)	
R23	7030003600	S.RESISTOR	ERJ3GEYJ 223 V (22 kΩ)	
R24	7030003480	S.RESISTOR	ERJ3GEYJ 222 V (2.2 kΩ)	
R25	7030003560	S.RESISTOR	ERJ3GEYJ 103 V (10 kΩ)	
R26	7030003560	S.RESISTOR	ERJ3GEYJ 103 V (10 kΩ)	
R27	7030003470	S.RESISTOR	ERJ3GEYJ 182 V (1.8 kΩ)	
R28	7030003440	S.RESISTOR	ERJ3GEYJ 102 V (1 kΩ)	
R29	7030003560	S.RESISTOR	ERJ3GEYJ 103 V (10 kΩ)	
R30	7030003490	S.RESISTOR	ERJ3GEYJ 272 V (2.7 kΩ)	
R31	7030003440	S.RESISTOR	ERJ3GEYJ 102 V (1 kΩ)	
R32	7030003200	S.RESISTOR	ERJ3GEYJ 100 V (10 Ω)	
R33	7030003200	S.RESISTOR	ERJ3GEYJ 100 V (10 Ω)	
R34	7030003680	S.RESISTOR	ERJ3GEYJ 104 V (100 kΩ)	
R35	7030003380	S.RESISTOR	ERJ3GEYJ 331 V (330 Ω)	
R36	7030003440	S.RESISTOR	ERJ3GEYJ 102 V (1 kΩ)	
R37	7030003640	S.RESISTOR	ERJ3GEYJ 473 V (47 kΩ)	
R39	7030003640	S.RESISTOR	ERJ3GEYJ 473 V (47 kΩ)	
R40	7030003680	S.RESISTOR	ERJ3GEYJ 104 V (100 kΩ)	
R41	7030003280	S.RESISTOR	ERJ3GEYJ 470 V (47 Ω)	
R42	7030003400	S.RESISTOR	ERJ3GEYJ 471 V (470 Ω)	
R43	7030003550	S.RESISTOR	ERJ3GEYJ 822 V (8.2 kΩ)	
R44	7030003320	S.RESISTOR	ERJ3GEYJ 101 V (100 Ω)	
R45	7030003680	S.RESISTOR	ERJ3GEYJ 104 V (100 kΩ)	
R46	7030003420	S.RESISTOR	ERJ3GEYJ 681 V (680 Ω)	
R47	7030003480	S.RESISTOR	ERJ3GEYJ 222 V (2.2 kΩ)	
R48	7030003480	S.RESISTOR	ERJ3GEYJ 222 V (2.2 kΩ)	
R49	7030003520	S.RESISTOR	ERJ3GEYJ 472 V (4.7 kΩ)	
R50	7030003520	S.RESISTOR	ERJ3GEYJ 472 V (4.7 kΩ)	
R51	7030003520	S.RESISTOR	ERJ3GEYJ 472 V (4.7 kΩ)	
R52	7030003460	S.RESISTOR	ERJ3GEYJ 152 V (1.5 kΩ)	
R54	7030003220	S.RESISTOR	ERJ3GEYJ 150 V (15 Ω)	
R55	7030003640	S.RESISTOR	ERJ3GEYJ 473 V (47 kΩ)	
R56	7030003400	S.RESISTOR	ERJ3GEYJ 471 V (470 Ω)	
R57	7030003620	S.RESISTOR	ERJ3GEYJ 333 V (33 kΩ)	
R58	7030003670	S.RESISTOR	ERJ3GEYJ 823 V (82 kΩ)	
R59	7030003480	S.RESISTOR	ERJ3GEYJ 222 V (2.2 kΩ)	
R60	7030003260	S.RESISTOR	ERJ3GEYJ 330 V (33 Ω)	
R62	7030003440	S.RESISTOR	ERJ3GEYJ 102 V (1 kΩ)	
R63	7030003360	S.RESISTOR	ERJ3GEYJ 221 V (220 Ω)	
R64	7030003680	S.RESISTOR	ERJ3GEYJ 104 V (100 kΩ)	
R66	7030003680	S.RESISTOR	ERJ3GEYJ 104 V (100 kΩ)	
R67	7030003290	S.RESISTOR	ERJ3GEYJ 560 V (56 Ω)	
R68	7030003720	S.RESISTOR	ERJ3GEYJ 224 V (220 kΩ)	
R69	7030003620	S.RESISTOR	ERJ3GEYJ 333 V (33 kΩ)	
R71	7030003400	S.RESISTOR	ERJ3GEYJ 471 V (470 Ω)	
R72	7030003370	S.RESISTOR	ERJ3GEYJ 271 V (270 Ω)	
R73	7030003470	S.RESISTOR	ERJ3GEYJ 182 V (1.8 kΩ)	[SEA], [CSA]
	7030003510	S.RESISTOR	ERJ3GEYJ 392 V (3.9 kΩ)	[USA]
R76	7030003320	S.RESISTOR	ERJ3GEYJ 101 V (100 Ω)	
R78	7030003440	S.RESISTOR	ERJ3GEYJ 102 V (1 kΩ)	
R79	7030003360	S.RESISTOR	ERJ3GEYJ 221 V (220 Ω)	
R81	7030003560	S.RESISTOR	ERJ3GEYJ 103 V (10 kΩ)	
R82	7030003290	S.RESISTOR	ERJ3GEYJ 560 V (56 Ω)	
R83	7030003620	S.RESISTOR	ERJ3GEYJ 333 V (33 kΩ)	
R84	7030003560	S.RESISTOR	ERJ3GEYJ 103 V (10 kΩ)	
R88	7030003400	S.RESISTOR	ERJ3GEYJ 471 V (470 Ω)	
R90	7030003720	S.RESISTOR	ERJ3GEYJ 224 V (220 kΩ)	
R92	7030003620	S.RESISTOR	ERJ3GEYJ 333 V (33 kΩ)	
R93	7030003720	S.RESISTOR	ERJ3GEYJ 224 V (220 kΩ)	
R95	7030000230	S.RESISTOR	MCR10EZHJ 56 Ω (560)	
R96	7030000660	S.RESISTOR	MCR10EZHJ 220 kΩ	
R98	7030009980	S.RESISTOR	ERJ12RSJR15U	

S.=Surface mount

[MAIN UNIT]

REF NO.	ORDER NO.	DESCRIPTION	
R101	7030003720	S.RESISTOR	ERJ3GEYJ 224 V (220 kΩ)
R103	7030003680	S.RESISTOR	ERJ3GEYJ 104 V (100 kΩ)
R104	7030003740	S.RESISTOR	ERJ3GEYJ 334 V (330 kΩ)
R105	7030003680	S.RESISTOR	ERJ3GEYJ 104 V (100 kΩ)
R106	7030003560	S.RESISTOR	ERJ3GEYJ 103 V (10 kΩ)
R107	7030003710	S.RESISTOR	ERJ3GEYJ 184 V (180 kΩ)
R108	7030003480	S.RESISTOR	ERJ3GEYJ 222 V (2.2 kΩ)
R109	7030003510	S.RESISTOR	ERJ3GEYJ 392 V (3.9 kΩ)
R110	7030003440	S.RESISTOR	ERJ3GEYJ 102 V (1 kΩ)
R111	7030003320	S.RESISTOR	ERJ3GEYJ 101 V (100 Ω)
R112	7030003620	S.RESISTOR	ERJ3GEYJ 333 V (33 kΩ)
R113	7030003680	S.RESISTOR	ERJ3GEYJ 104 V (100 kΩ)
R114	7030003640	S.RESISTOR	ERJ3GEYJ 473 V (47 kΩ)
R117	7030003560	S.RESISTOR	ERJ3GEYJ 103 V (10 kΩ)
R118	7030003560	S.RESISTOR	ERJ3GEYJ 103 V (10 kΩ)
R119	7030003720	S.RESISTOR	ERJ3GEYJ 224 V (220 kΩ)
R120	7030003440	S.RESISTOR	ERJ3GEYJ 102 V (1 kΩ)
R121	7030001010	S.RESISTOR	MCR50JZHJ 10 Ω (100)
R122	7030003640	S.RESISTOR	ERJ3GEYJ 473 V (47 kΩ)
R123	7030003540	S.RESISTOR	ERJ3GEYJ 682 V (6.8 kΩ)
R124	7030003550	S.RESISTOR	ERJ3GEYJ 822 V (8.2 kΩ)
R125	7030000100	S.RESISTOR	MCR10EZHJ 4.7 Ω (4R7)
R126	7030003550	S.RESISTOR	ERJ3GEYJ 822 V (8.2 kΩ)
R127	7030003690	S.RESISTOR	ERJ3GEYJ 124 V (120 kΩ)
R128	7030003680	S.RESISTOR	ERJ3GEYJ 104 V (100 kΩ)
R129	7030003680	S.RESISTOR	ERJ3GEYJ 104 V (100 kΩ)
R130	7030003610	S.RESISTOR	ERJ3GEYJ 273 V (27 kΩ)
R131	7030003670	S.RESISTOR	ERJ3GEYJ 823 V (82 kΩ)
R132	7030003640	S.RESISTOR	ERJ3GEYJ 473 V (47 kΩ)
R133	7030003440	S.RESISTOR	ERJ3GEYJ 102 V (1 kΩ)
R134	7030003680	S.RESISTOR	ERJ3GEYJ 104 V (100 kΩ)
R135	7030003570	S.RESISTOR	ERJ3GEYJ 123 V (12 kΩ) [USA] only
R136	7030003570	S.RESISTOR	ERJ3GEYJ 123 V (12 kΩ) [USA] only
R137	7030003570	S.RESISTOR	ERJ3GEYJ 123 V (12 kΩ) [USA] only
R138	7030003570	S.RESISTOR	ERJ3GEYJ 123 V (12 kΩ) [USA] only
R139	7030003580	S.RESISTOR	ERJ3GEYJ 153 V (15 kΩ) [USA] only
R140	7030003580	S.RESISTOR	ERJ3GEYJ 153 V (15 kΩ) [USA] only
R150	7030006070	S.RESISTOR	ERJ12YJ101U (100 Ω)
R151	7030009980	S.RESISTOR	ERJ12RSJR15U
R152	7030003270	S.RESISTOR	ERJ3GEYJ 390 V (39 Ω)
R153	7030003340	S.RESISTOR	ERJ3GEYJ 151 V (150 Ω)
R154	7030003340	S.RESISTOR	ERJ3GEYJ 151 V (150 Ω)
R155	7030003490	S.RESISTOR	ERJ3GEYJ 272 V (2.7 kΩ) [USA] only
R156	7030003640	S.RESISTOR	ERJ3GEYJ 473 V (47 kΩ) [USA] only
R157	7030003640	S.RESISTOR	ERJ3GEYJ 473 V (47 kΩ) [USA] only
R161	7030003620	S.RESISTOR	ERJ3GEYJ 333 V (33 kΩ)
R162	7030003610	S.RESISTOR	ERJ3GEYJ 273 V (27 kΩ)
R163	7030000230	S.RESISTOR	MCR10EZHJ 56 Ω (560)
R164	7030000230	S.RESISTOR	MCR10EZHJ 56 Ω (560)
R165	7030003680	S.RESISTOR	ERJ3GEYJ 104 V (100 kΩ)
R166	7030003560	S.RESISTOR	ERJ3GEYJ 103 V (10 kΩ)
R167	7030003680	S.RESISTOR	ERJ3GEYJ 104 V (100 kΩ)
R168	7030003340	S.RESISTOR	ERJ3GEYJ 151 V (150 Ω)
R169	7030003270	S.RESISTOR	ERJ3GEYJ 390 V (39 Ω)
R170	7030003340	S.RESISTOR	ERJ3GEYJ 151 V (150 Ω)
R171	7030003440	S.RESISTOR	ERJ3GEYJ 102 V (1 kΩ) [USA] only
R172	7030003680	S.RESISTOR	ERJ3GEYJ 104 V (100 kΩ) [USA] only
R173	7030003560	S.RESISTOR	ERJ3GEYJ 103 V (10 kΩ)
R174	7030003320	S.RESISTOR	ERJ3GEYJ 101 V (100 Ω)
R175	7030003640	S.RESISTOR	ERJ3GEYJ 473 V (47 kΩ)
R176	7030003440	S.RESISTOR	ERJ3GEYJ 102 V (1 kΩ)
C1	4550006410	S.TANTALUM	ECST1VY334R
C2	4030006860	S.CERAMIC	C1608 JB 1H 102K-T-A
C3	4510004440	S.ELECTROLYTIC	ECEV1HA010SR
C4	4030011600	S.CERAMIC	C1608 JB 1E 104K-T-N
C5	4030006900	S.CERAMIC	C1608 JB 1H 103K-T-A
C7	4030006860	S.CERAMIC	C1608 JB 1H 102K-T-A
C8	4030006860	S.CERAMIC	C1608 JB 1H 102K-T-A
C9	4030006860	S.CERAMIC	C1608 JB 1H 102K-T-A
C10	4510004640	S.ELECTROLYTIC	ECEV1CA470SP

[MAIN UNIT]

REF NO.	ORDER NO.	DESCRIPTION	
C11	4550006250	S.TANTALUM	TEMSVA 1A 106M-8L
C12	4550006760	S.TANTALUM	TEMSVB2 1A 336M-8R
C13	4030007110	S.CERAMIC	C1608 CH 1H 680J-T-A
C14	4030006860	S.CERAMIC	C1608 JB 1H 102K-T-A
C15	4030006860	S.CERAMIC	C1608 JB 1H 102K-T-A
C16	4030006990	S.CERAMIC	C1608 CH 1H 080D-T-A
C17	4030006860	S.CERAMIC	C1608 JB 1H 102K-T-A
C20	4030007090	S.CERAMIC	C1608 CH 1H 470J-T-A
C21	4030007090	S.CERAMIC	C1608 CH 1H 470J-T-A
C22	4030007040	S.CERAMIC	C1608 CH 1H 180J-T-A
C23	4030007070	S.CERAMIC	C1608 CH 1H 330J-T-A
C24	4550006170	S.TANTALUM	ECST1AY225R
C25	4030006980	S.CERAMIC	C1608 CH 1H 070D-T-A
C26	4030007010	S.CERAMIC	C1608 CH 1H 100D-T-A
C28	4030006860	S.CERAMIC	C1608 JB 1H 102K-T-A
C29	4030006980	S.CERAMIC	C1608 CH 1H 070D-T-A
C30	4030006950	S.CERAMIC	C1608 CH 1H 040C-T-A
C31	4030006860	S.CERAMIC	C1608 JB 1H 102K-T-A
C32	4030007020	S.CERAMIC	C1608 CH 1H 120J-T-A
C34	4030009500	S.CERAMIC	C1608 CH 1H 0R5B-T-A
C36	4030006860	S.CERAMIC	C1608 JB 1H 102K-T-A
C37	4030009500	S.CERAMIC	C1608 CH 1H 0R5B-T-A
C38	4030006860	S.CERAMIC	C1608 JB 1H 102K-T-A
C39	4030011600	S.CERAMIC	C1608 JB 1E 104K-T-N
C41	4030006860	S.CERAMIC	C1608 JB 1H 102K-T-A
C42	4030006860	S.CERAMIC	C1608 JB 1H 102K-T-A
C44	4030006860	S.CERAMIC	C1608 JB 1H 102K-T-A
C45	4030006860	S.CERAMIC	C1608 JB 1H 102K-T-A
C47	4030011600	S.CERAMIC	C1608 JB 1E 104K-T-N
C48	4030006860	S.CERAMIC	C1608 JB 1H 102K-T-A
C49	4030007010	S.CERAMIC	C1608 CH 1H 100D-T-A
C50	4030006940	S.CERAMIC	C1608 CH 1H 030C-T-A
C51	4030006860	S.CERAMIC	C1608 JB 1H 102K-T-A
C52	4030006860	S.CERAMIC	C1608 JB 1H 102K-T-A
C53	4030006860	S.CERAMIC	C1608 JB 1H 102K-T-A
C54	4030007050	S.CERAMIC	C1608 CH 1H 220J-T-A
C55	4030007050	S.CERAMIC	C1608 CH 1H 220J-T-A
C56	4030006860	S.CERAMIC	C1608 JB 1H 102K-T-A
C57	4030006860	S.CERAMIC	C1608 JB 1H 102K-T-A
C58	4030006860	S.CERAMIC	C1608 JB 1H 102K-T-A
C59	4030006860	S.CERAMIC	C1608 JB 1H 102K-T-A
C60	4030006860	S.CERAMIC	C1608 JB 1H 102K-T-A
C61	4030007050	S.CERAMIC	C1608 CH 1H 220J-T-A
C62	4030007020	S.CERAMIC	C1608 CH 1H 120J-T-A
C63	4030006860	S.CERAMIC	C1608 JB 1H 102K-T-A
C64	4030011600	S.CERAMIC	C1608 JB 1E 104K-T-N
C65	4030007050	S.CERAMIC	C1608 CH 1H 220J-T-A
C66	4030007050	S.CERAMIC	C1608 CH 1H 220J-T-A
C67	4030006860	S.CERAMIC	C1608 JB 1H 102K-T-A
C68	4030007000	S.CERAMIC	C1608 CH 1H 090D-T-A
C69	4510004630	S.ELECTROLYTIC	ECEV1CA100SR
C70	4030006860	S.CERAMIC	C1608 JB 1H 102K-T-A
C71	4030007090	S.CERAMIC	C1608 CH 1H 470J-T-A
C72	4030006860	S.CERAMIC	C1608 JB 1H 102K-T-A
C73	4030007050	S.CERAMIC	C1608 CH 1H 220J-T-A
C74	4030006860	S.CERAMIC	C1608 JB 1H 102K-T-A
C75	4030006860	S.CERAMIC	C1608 JB 1H 102K-T-A
C77	4030006900	S.CERAMIC	C1608 JB 1H 103K-T-A
C78	4030011600	S.CERAMIC	C1608 JB 1E 104K-T-N
C79	4030007080	S.CERAMIC	C1608 CH 1H 390J-T-A
C80	4030007050	S.CERAMIC	C1608 CH 1H 220J-T-A
C81	4030006900	S.CERAMIC	C1608 JB 1H 103K-T-A
C82	4510004630	S.ELECTROLYTIC	ECEV1CA100SR
C83	4030012600	S.CERAMIC	C2012 JB 1A 105M-T-A
C84	4030007170	S.CERAMIC	C1608 CH 1H 221J-T-A
C85	4030007170	S.CERAMIC	C1608 CH 1H 221J-T-A
C86	4030006860	S.CERAMIC	C1608 JB 1H 102K-T-A
C87	4030007100	S.CERAMIC	C1608 CH 1H 560J-T-A
C88	4030007100	S.CERAMIC	C1608 CH 1H 560J-T-A
C89	4030006900	S.CERAMIC	C1608 JB 1H 103K-T-A
C90	4030006860	S.CERAMIC	C1608 JB 1H 102K-T-A
C91	4030006860	S.CERAMIC	C1608 JB 1H 102K-T-A
C93	4030006910	S.CERAMIC	C1608 CH 1H 0R5C-T-A
C94	4030006860	S.CERAMIC	C1608 JB 1H 102K-T-A
C95	4030006860	S.CERAMIC	C1608 JB 1H 102K-T-A
C96	4030006860	S.CERAMIC	C1608 JB 1H 102K-T-A
C97	4030006960	S.CERAMIC	C1608 CH 1H 050C-T-A
C98	4030008900	S.CERAMIC	C1608 JB 1H 333K-T-A
C100	4030007120	S.CERAMIC	C1608 CH 1H 820J-T-A
C101	4030006860	S.CERAMIC	C1608 JB 1H 102K-T-A
C102	4030006860	S.CERAMIC	C1608 JB 1H 102K-T-A
C104	4510006220	S.ELECTROLYTIC	ECEV1CA101UP

S.=Surface mount

[MAIN UNIT]

REF NO.	ORDER NO.	DESCRIPTION	
C105	4030006860	S.CERAMIC	C1608 JB 1H 102K-T-A
C106	4030006860	S.CERAMIC	C1608 JB 1H 102K-T-A
C108	4030006860	S.CERAMIC	C1608 JB 1H 102K-T-A
C109	4030006900	S.CERAMIC	C1608 JB 1H 103K-T-A
C111	4030009990	S.CERAMIC	C1608 CH 1H 200J-T-A
C112	4030007100	S.CERAMIC	C1608 CH 1H 560J-T-A
C113	4030006860	S.CERAMIC	C1608 JB 1H 102K-T-A
C116	4030006860	S.CERAMIC	C1608 JB 1H 102K-T-A
C117	4030006900	S.CERAMIC	C1608 JB 1H 103K-T-A
C118	4510004640	S.ELECTROLYTIC	ECEV1CA470SP
C120	4030006900	S.CERAMIC	C1608 JB 1H 103K-T-A
C122	4030006860	S.CERAMIC	C1608 JB 1H 102K-T-A
C123	4030006860	S.CERAMIC	C1608 JB 1H 102K-T-A
C124	4030006960	S.CERAMIC	C1608 CH 1H 050C-T-A
C125	4510004630	S.ELECTROLYTIC	ECEV1CA100SR
C126	4030006860	S.CERAMIC	C1608 JB 1H 102K-T-A
C127	4030006950	S.CERAMIC	C1608 CH 1H 040C-T-A
C128	4030006860	S.CERAMIC	C1608 JB 1H 102K-T-A
C129	4030006900	S.CERAMIC	C1608 JB 1H 103K-T-A
C130	4030007060	S.CERAMIC	C1608 CH 1H 270J-T-A
C131	4030007080	S.CERAMIC	C1608 CH 1H 390J-T-A
C133	4030006920	S.CERAMIC	C1608 CH 1H 010C-T-A
C134	4030006860	S.CERAMIC	C1608 JB 1H 102K-T-A
C135	4030004990	S.CERAMIC	C2012 CH 1H 101J-T-A
C136	4030006930	S.CERAMIC	C1608 CH 1H 020C-T-A
C137	4030006860	S.CERAMIC	C1608 JB 1H 102K-T-A
C138	4030006860	S.CERAMIC	C1608 JB 1H 102K-T-A
C139	4030007080	S.CERAMIC	C1608 CH 1H 390J-T-A
C140	4030006900	S.CERAMIC	C1608 JB 1H 103K-T-A
C141	4030006960	S.CERAMIC	C1608 CH 1H 050C-T-A
C142	4030006860	S.CERAMIC	C1608 JB 1H 102K-T-A
C145	4030006920	S.CERAMIC	C1608 CH 1H 010C-T-A
C146	4030006860	S.CERAMIC	C1608 JB 1H 102K-T-A
C147	4510006220	S.ELECTROLYTIC	ECEV1CA101UP
C148	4030008560	S.CERAMIC	C1608 CH 1H 300J-T-A
C149	4030011600	S.CERAMIC	C1608 JB 1E 104K-T-N
C150	4030006860	S.CERAMIC	C1608 JB 1H 102K-T-A
C151	4030017880	S.CERAMIC	ERF22X 6C2H 560J D01L (GRM111)
C152	4030006930	S.CERAMIC	C1608 CH 1H 020C-T-A
C153	4030011600	S.CERAMIC	C1608 JB 1E 104K-T-N
C154	4030006860	S.CERAMIC	C1608 JB 1H 102K-T-A
C155	4030006900	S.CERAMIC	C1608 JB 1H 103K-T-A
C156	4030017890	S.CERAMIC	ERF22X 6C2H 101J D01L (GRM111)
C157	4550006210	S.TANTALUM	ECST1CX106R
C158	4030006860	S.CERAMIC	C1608 JB 1H 102K-T-A
C159	4030017880	S.CERAMIC	ERF22X 6C2H 560J D01L (GRM111)
C160	4030006860	S.CERAMIC	C1608 JB 1H 102K-T-A
C161	4030006860	S.CERAMIC	C1608 JB 1H 102K-T-A
C163	4030006860	S.CERAMIC	C1608 JB 1H 102K-T-A
C164	4030006860	S.CERAMIC	C1608 JB 1H 102K-T-A
C166	4510006220	S.ELECTROLYTIC	ECEV1CA101UP
C167	4030011730	S.CERAMIC	GRM31M2C2H101JV01L (GRM42-6 CH)
C168	4030006860	S.CERAMIC	C1608 JB 1H 102K-T-A
C169	4030006860	S.CERAMIC	C1608 JB 1H 102K-T-A
C170	4030006860	S.CERAMIC	C1608 JB 1H 102K-T-A
C171	4030011160	S.CERAMIC	GRM31M2C2H150JV01L (GRM42-6 CH)
C172	4030006860	S.CERAMIC	C1608 JB 1H 102K-T-A
C173	4030006860	S.CERAMIC	C1608 JB 1H 102K-T-A
C174	4030006860	S.CERAMIC	C1608 JB 1H 102K-T-A
C175	4510006250	S.ELECTROLYTIC	ECEV1CA331UP
C176	4030011190	S.CERAMIC	GRM31M2C2H270JV01L (GRM42-6 CH)
C177	4510004630	S.ELECTROLYTIC	ECEV1CA100SR
C178	4030006960	S.CERAMIC	C1608 CH 1H 050C-T-A
C179	4030006860	S.CERAMIC	C1608 JB 1H 102K-T-A
C180	4030006860	S.CERAMIC	C1608 JB 1H 102K-T-A
C181	4510004440	S.ELECTROLYTIC	ECEV1HA010SR
C182	4030007080	S.CERAMIC	C1608 CH 1H 390J-T-A
C183	4030006920	S.CERAMIC	C1608 CH 1H 010C-T-A
C184	4030006960	S.CERAMIC	C1608 CH 1H 050C-T-A
C185	4030006860	S.CERAMIC	C1608 JB 1H 102K-T-A
C187	4030006860	S.CERAMIC	C1608 JB 1H 102K-T-A
C188	4510004440	S.ELECTROLYTIC	ECEV1HA010SR
C189	4030006860	S.CERAMIC	C1608 JB 1H 102K-T-A
C190	4030011020	S.CERAMIC	GRM31M4C2H1R0CY21L (GRM42-6 CK)
C191	4030007020	S.CERAMIC	C1608 CH 1H 120J-T-A
C192	4030008880	S.CERAMIC	C1608 JB 1H 223K-T-A
C193	4030006860	S.CERAMIC	C1608 JB 1H 102K-T-A
C194	4510006250	S.ELECTROLYTIC	ECEV1CA331UP
C195	4030008960	S.CERAMIC	C2012 JB 1C 104K-T-A
C196	4030011020	S.CERAMIC	GRM31M4C2H1R0CY21L (GRM42-6 CK)
C197	4030007020	S.CERAMIC	C1608 CH 1H 120J-T-A
C198	4030006860	S.CERAMIC	C1608 JB 1H 102K-T-A

[MAIN UNIT]

REF NO.	ORDER NO.	DESCRIPTION		
C200	4030006860	S.CERAMIC	C1608 JB 1H 102K-T-A	
C201	4030007040	S.CERAMIC	C1608 CH 1H 180J-T-A	
C203	4030017980	S.CERAMIC	ERF22X 6C2H 470J D01L	
C204	4510006260	S.ELECTROLYTIC	ECEV1AA471UP	
C205	4030006860	S.CERAMIC	C1608 JB 1H 102K-T-A	
C206	4030011050	S.CERAMIC	GRM31M3C2H3R0CY21L (GRM42-6 CJ)	
C207	4510006020	ELECTROLYTIC	16 MV 2200 HC	
C208	4030011210	S.CERAMIC	GRM31M2C2H330JV01L (GRM42-6 CH)	
C209	4030011600	S.CERAMIC	C1608 JB 1E 104K-T-N	
C210	4030011160	S.CERAMIC	GRM31M2C2H150JV01L (GRM42-6 CH)	
C211	4030006860	S.CERAMIC	C1608 JB 1H 102K-T-A	
C212	4030006860	S.CERAMIC	C1608 JB 1H 102K-T-A	
C213	4030006860	S.CERAMIC	C1608 JB 1H 102K-T-A	
C214	4510004640	S.ELECTROLYTIC	ECEV1CA470SP	
C215	4030011600	S.CERAMIC	C1608 JB 1E 104K-T-N	
C216	4030011600	S.CERAMIC	C1608 JB 1E 104K-T-N	
C217	4030011240	S.CERAMIC	GRM31M2C2H470JV01L (GRM42-6 CH)	
C218	4030011180	S.CERAMIC	GRM31M2C2H220JV01L (GRM42-6 CH)	
C219	4030007000	S.CERAMIC	C1608 CH 1H 090D-T-A	
C222	4030006900	S.CERAMIC	C1608 JB 1H 103K-T-A	
C224	4030011600	S.CERAMIC	C1608 JB 1E 104K-T-N	
C225	4030017200	S.CERAMIC	GRM31BR32J102KY01L (GHM1030 R)	
C227	4030011730	S.CERAMIC	GRM31M2C2H101JV01L (GRM42-6 CH)	
C228	4030011230	S.CERAMIC	GRM31M2C2H390JV01L (GRM42-6 CH)	
C229	4030011230	S.CERAMIC	GRM31M2C2H390JV01L (GRM42-6 CH)	
C230	4510004630	S.ELECTROLYTIC	ECEV1CA100SR	[USA] only
C232	4030006860	S.CERAMIC	C1608 JB 1H 102K-T-A	[USA] only
C233	4030011600	S.CERAMIC	C1608 JB 1E 104K-T-N	[USA] only
C234	4030007160	S.CERAMIC	C1608 CH 1H 181J-T-A	
C235	4030010760	S.CERAMIC	C1608 CH 1H 331J-T-A	
C237	4030006930	S.CERAMIC	C1608 CH 1H 020C-T-A	
C238	4030006860	S.CERAMIC	C1608 JB 1H 102K-T-A	
C239	4030011600	S.CERAMIC	C1608 JB 1E 104K-T-N	
C240	4030006860	S.CERAMIC	C1608 JB 1H 102K-T-A	
C241	4030011600	S.CERAMIC	C1608 JB 1E 104K-T-N	
C242	4030006860	S.CERAMIC	C1608 JB 1H 102K-T-A	
C243	4030006970	S.CERAMIC	C1608 CH 1H 060D-T-A	
C244	4030011600	S.CERAMIC	C1608 JB 1E 104K-T-N	
C245	4030008680	S.CERAMIC	C2012 JF 1C 105Z-T-A	
J1	6510018040	CONNECTOR	52330-1217	
J2	6510018040	CONNECTOR	52330-1217	
J4	6450002220	CONNECTOR	PJ-0008P-5 <AI>	
J5	6510014960	S.CONNECTOR	B2B-ZR-SM3-TF	
J6	6510014960	S.CONNECTOR	B2B-ZR-SM3-TF	
W1	7030003860	S.JUMPER	ERJ3GE JPW V	[SEA], [CSA] only
W2	7030003860	S.JUMPER	ERJ3GE JPW V	[SEA], [CSA] only
W3	7030003860	S.JUMPER	ERJ3GE JPW V	
W5	7120000470	JUMPER	ERDS2T0	
W6	8900010980	CABLE	OPC-1131	
EP1	6910012350	S.BEAD	MMZ1608Y 102BT	
EP2	6910012350	S.BEAD	MMZ1608Y 102BT	
EP3	0910055322	PCB	B 5800B	

S.=Surface mount

SECTION 6 MECHANICAL PARTS AND DISASSEMBLY

6-1 IC-V8000

[CHASSIS PARTS]

REF. NO.	ORDER NO.	DESCRIPTION	QTY.
J1	6510004880	Connector MR-DSE-01	1
MF1	2710000720	Fan DF125020BH	1
MP1	8010018801	2509 Chassis-1	1
MP2	8030056880	2509 Fan holder	1
MP3	8110007670	2509 Cover	1
MP4	8810008660	Screw BT M3 x 8 NI-ZU (BT)	2
MP5	8810008660	Screw BT M3 x 8 NI-ZU (BT)	1
MP6	8810008660	Screw BT M3 x 8 NI-ZU (BT)	13
MP7	8810008030	Screw H M2.6 x 8	2
MP9	8810005160	Hex socket bolt M3 x 20 ZK	3
MP10	8810009610	Screw M2.6 x 6 ZK	4
MP11	8930039610	Thermally sheet (C)	3
MP14	8810010140	Screw M3 x 30 ZK	4
MP15	8510014500	2509 Shield plate	1
MP16	8930057880	Rubber sheet (BA)	1
MP17	8930048390	Sheet (BZ)	1

[LOGIC BOARD]

REF. NO.	ORDER NO.	DESCRIPTION	QTY.
DS19	5030002250	L1-0256TAM	1
S9	2250000370	Encoder EVQ-VENF01 24B	1
SP1	2510001150	Speaker 045P0804	1
WS1	8600036880	FX2509 P01L0	1
EP9	8930057360	LCD contact SRCN-2509-SP-N-W	1
MP1	8210018440	2509 Front panel	1
MP2	8930057300	2509 LCD filter	1
MP3	8210018450	2509 Reflectort	1
MP4	8930056850	2509 A-keyboard	1
MP5	8930056860	2509 B-keyboard	1
MP6	8930056870	2509 C-keyboard	1
MP7	8510014340	2509 Front plate	1
MP8	8610010602	Knob N-267-2	2
MP9	8610011140	Knob N-291	1
MP12	8810008760	Screw B0 M2 x 8 NI-ZU (BT)	4

[MAIN UNIT]

REF. NO.	ORDER NO.	DESCRIPTION	QTY.
W6	8900010980	Cable OPC-1131	1
MP1	8410002380	2399 Heatsink	1
MP2	8510014470	2509 VCO case	1
MP3	8510014460	2509 VCO cover	1

[ACCESSORIES]

REF. NO.	ORDER NO.	DESCRIPTION	QTY.
F1	5210000080	Fuse (20A)	1
MC1	0880001060	Microphone HM-133 ACC [CSA-1], [USA-2]	1
	0800005740	Microphone HM-118TN ACC [CSA]	1
	0800005820	Microphone HM-118N ACC [SEA]	1
	0800005720	Microphone HM-118TAN ACC [USA-3]	1
W1	8900010990	Cable OPC-1132 ACC	1
MP1	8010016730	150 Mobil bracket	1
MP2	8930041170	452 Felt	2
MP3	8820000530	Flange bolt M4 x 8	4
MP4	8810000950	Screw A0 M5 x 16	4
MP5	8850000180	Flat washer M5 SUS	4
MP6	8850000500	Spring washer M5 SUS	4
MP7	8810000470	Screw M5 x 12 (+/–)	4
MP8	8830000250	Nut M5 SUS	4
MP9	8930007300	MIC hanger [USA] only	1

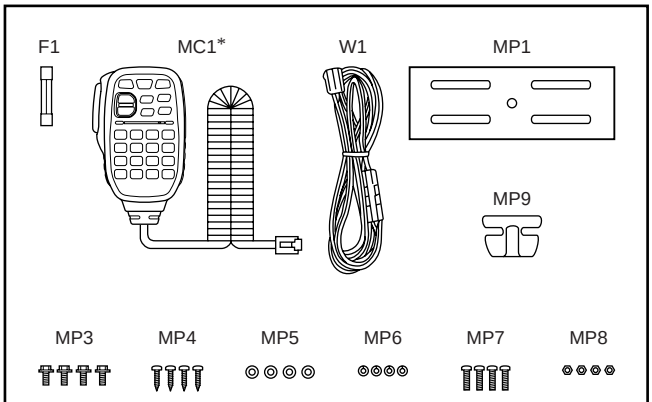

*The illustration is the HM-133V.

Screw abbreviations
A0, B0, BT: Self-tapping
NI-ZU: Nickel-Zinc
ZK: Black
SUS: Stainless

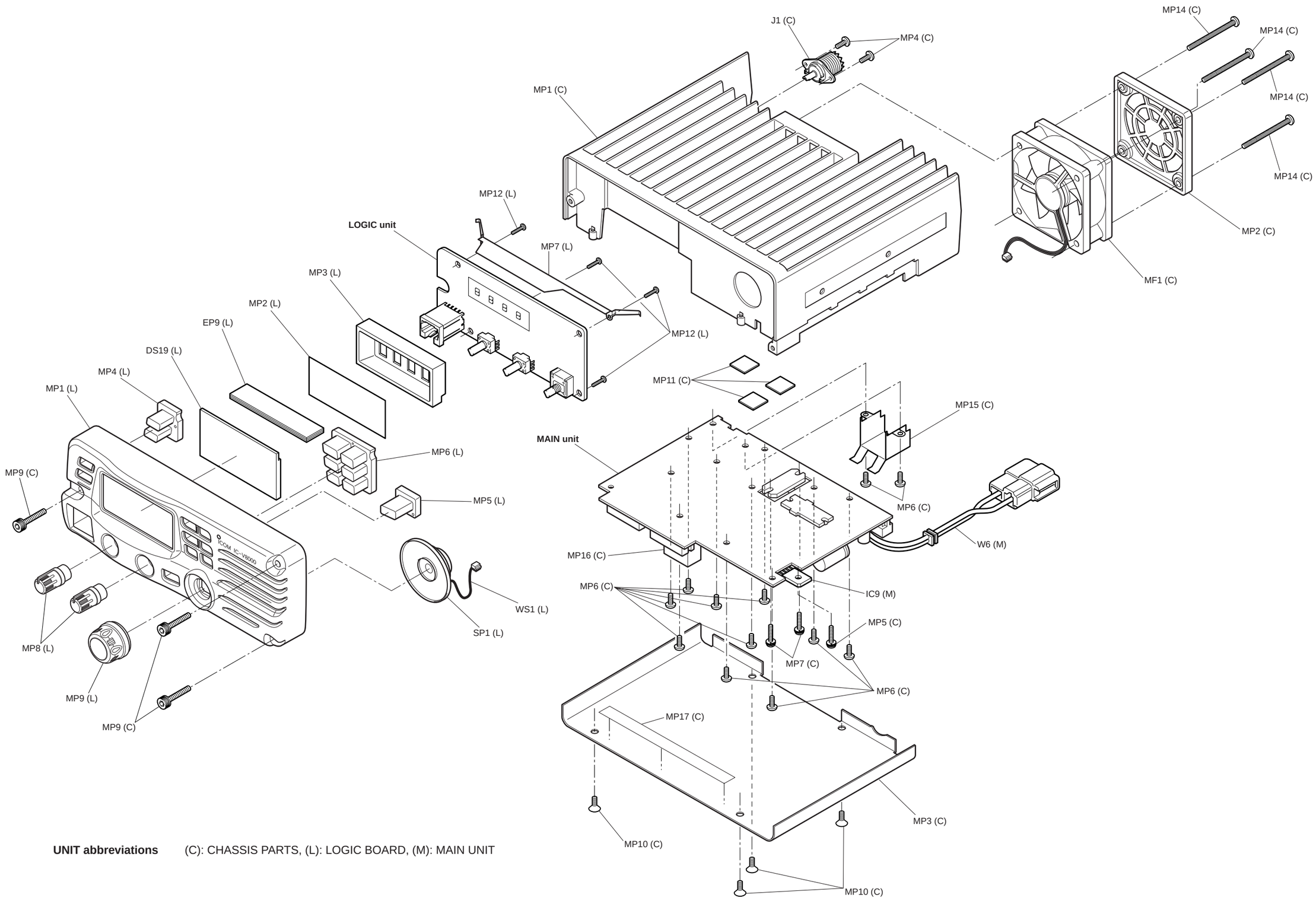

UNIT abbreviations (C): CHASSIS PARTS, (L): LOGIC BOARD, (M): MAIN UNIT

6-2 HM-133V

[CHASSIS PARTS]

REF. NO.	ORDER NO.	DESCRIPTION	QTY.
W1	89000011271	Cable OPC-1153	1
MP1	8210018830	2539 Front panel	1
	8210018890	2539 Front panel (A)	1
	8210018910	2539 Front panel (B)	1
MP2	8210018840	2539 Rear panel	1
MP3	8930057380	2539 PTT button	1
MP4	8930057390	2539 LED lens	2
MP5	8930057570	SW rubber	1
MP6	8930057520	2539 Keyboard	1
	8930057710	2539 Keyboard (A)	1
	8930057700	2539 Keyboard (B)	1
MP8	8810009370	Screw B0 M3 x 12 ZK (BT)	2
MP9	8810009560	Screw B0 M2 x 6 ZK (BT)	3

[MAIN UNIT]

REF. NO.	ORDER NO.	DESCRIPTION	QTY.
MC1	7700002310	Microphone EM-140	1

Screw abbreviations B0, BT: Self-tapping
ZK: Black

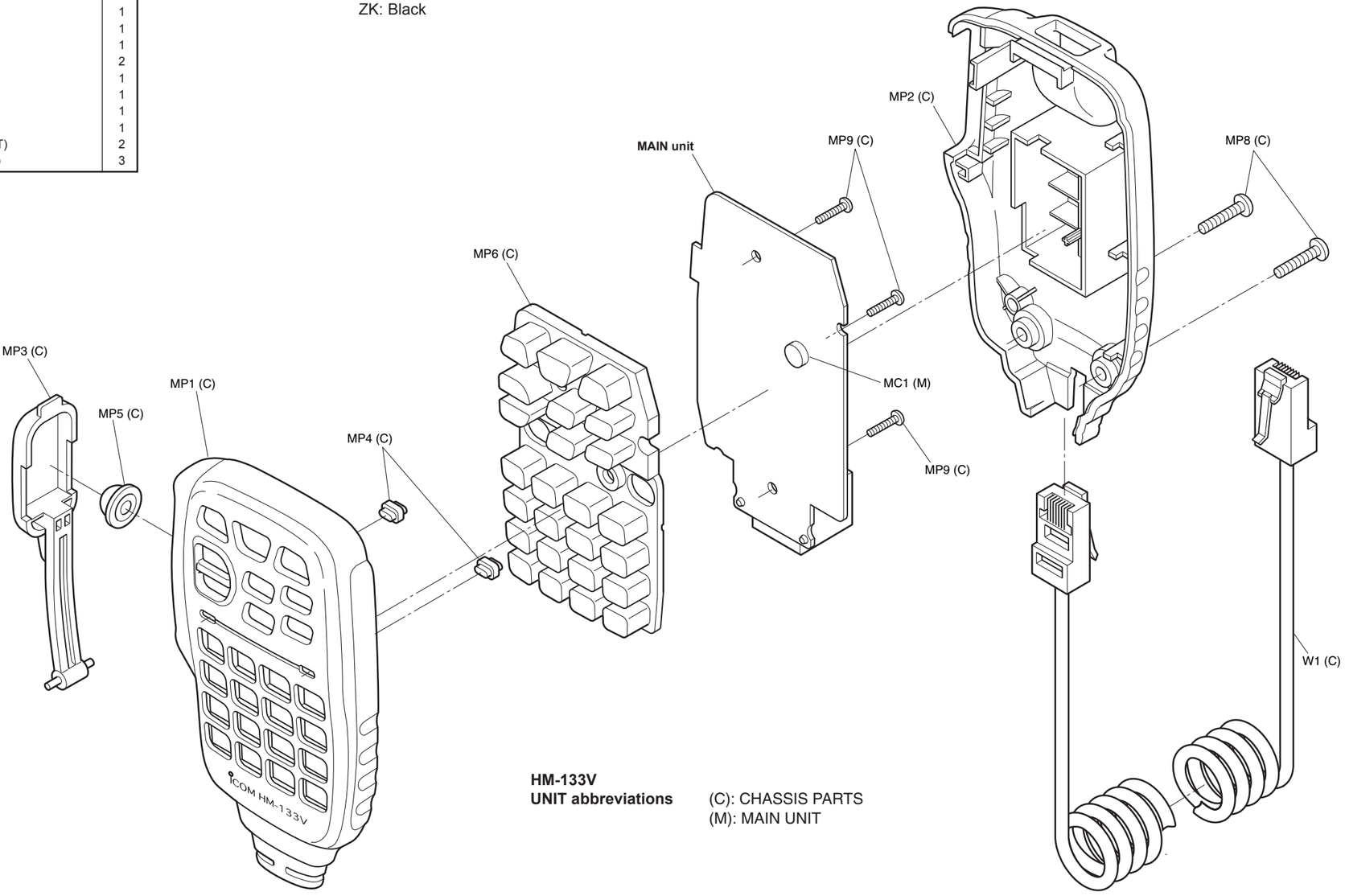

HM-133V UNIT abbreviations
(C): CHASSIS PARTS
(M): MAIN UNIT

SECTION 7 SEMI-CONDUCTOR INFORMATION

• TRANSISTOR AND FET'S

2SA1576 R (Symbol: FR) 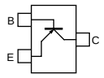	**2SA1734** (Symbol: LB) 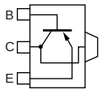	**2SA1586 GR** (Symbol: S0) 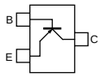	**2SB1132 R** (Symbol: BARB) 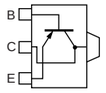	**2SC2712 BL** (Symbol: L0) 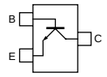
2SC3356 (Symbol: R22) 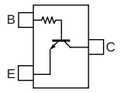	**2SC4116 BL** (Symbol: LL) 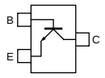	**2SC4116 GR** (Symbol: LG) 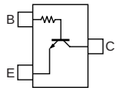	**2SC4213 B** (Symbol: AB) 	**2SC4226 R25** (Symbol: R25) 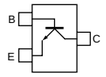
2SC4406 4 (Symbol: JT) 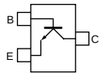	**2SC4684 (LB)** (Symbol: 2-7B2A) 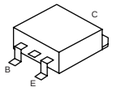	**2SK1069 4** (Symbol: FJ) 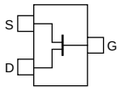	**2SK3074** (Symbol: UW) 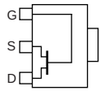	**2SK3075** (Symbol: UB F) 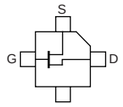
3SK272 (Symbol: K) 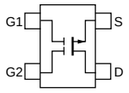	**DTA113 ZU** (Symbol: 111) 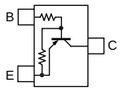	**DTA114 EU** (Symbol: 16) 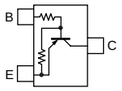	**DTA143 TUA** (Symbol: 93) 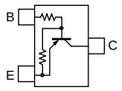	**DTA144 EU** (Symbol: 16) 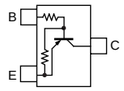
DTB113 ZK (Symbol: G11) 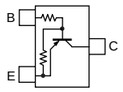	**DTC114 EU** (Symbol: 24) 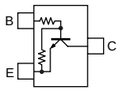	**DTC143 ZU** (Symbol: 123) 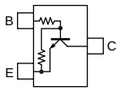	**DTC144 EU** (Symbol: 26) 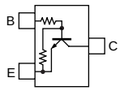	**DTC144 TU** (Symbol: 06) 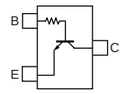
RD70HVF1 (Symbol: RD70HVF1) 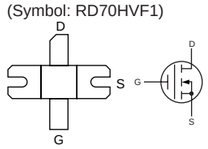	**XP4601** (Symbol: 5C) 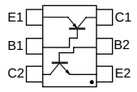			

• DIODES

1SS133 (Symbol: Yellow line) 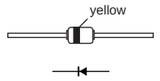	**1SS355** (Symbol: A) 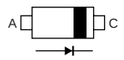	**DA221** (Symbol: K) 	**DAN222** (Symbol: N) 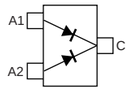	**DSA3A1** (Symbol:) 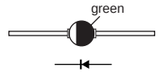
HVC350B (Symbol: BO) 	**HVC375B** (Symbol: B8) 	**HVC376B** (Symbol: B9) 	**HVU131TRF** (Symbol: P1) 	**MA2S111** (Symbol: A)
MA2S728 (Symbol: B) 	**MA742** (Symbol: M1U) 	**MA77** (Symbol: 4B) 	**MA8056M** (Symbol: 5-6) 	**MA8075 L** (Symbol: 7-5)
MA8091 M (Symbol: 9-1) 	**RD20E B2** (Symbol: 202) 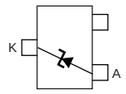	**XB15A308** (Symbol: T8) 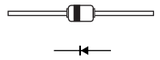	**XB15A407** (Symbol: None) 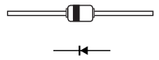	

SECTION 8 BOARD LAYOUTS

8-1 HM-133V

● TOP VIEW

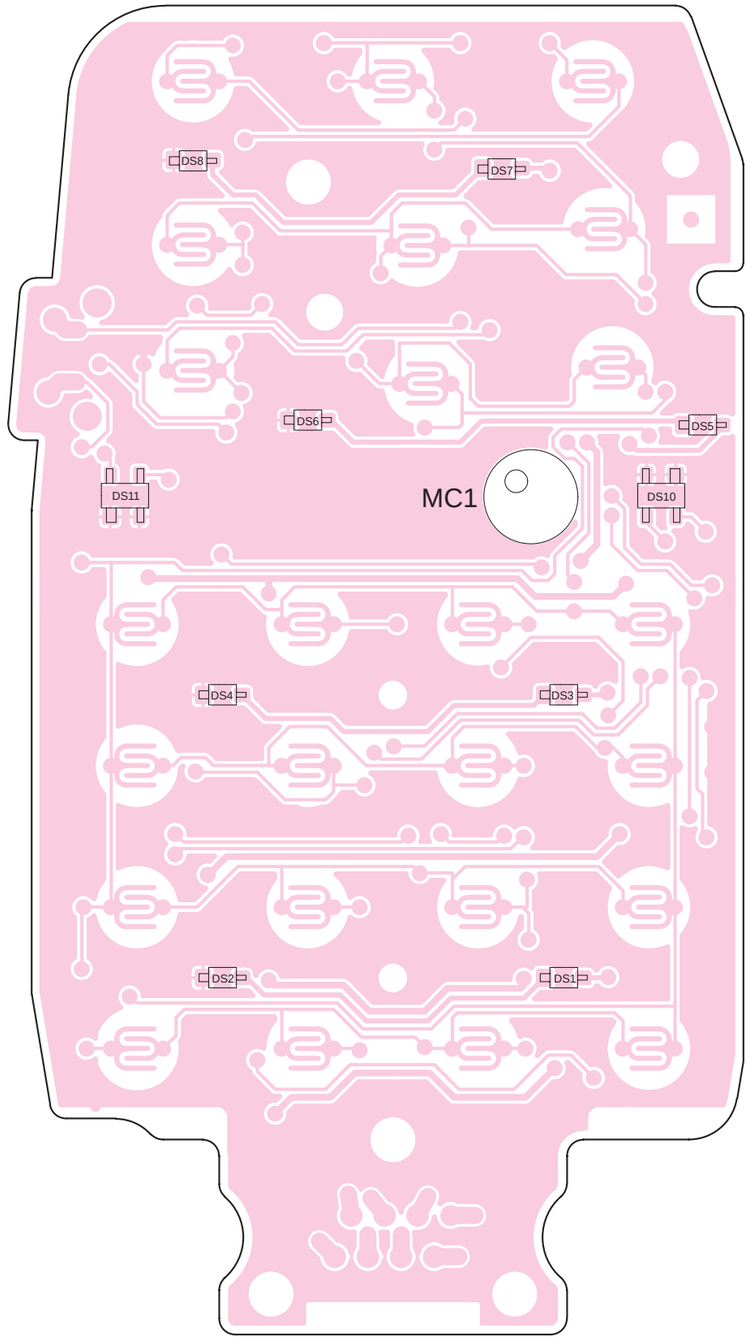

● BOTTOM VIEW

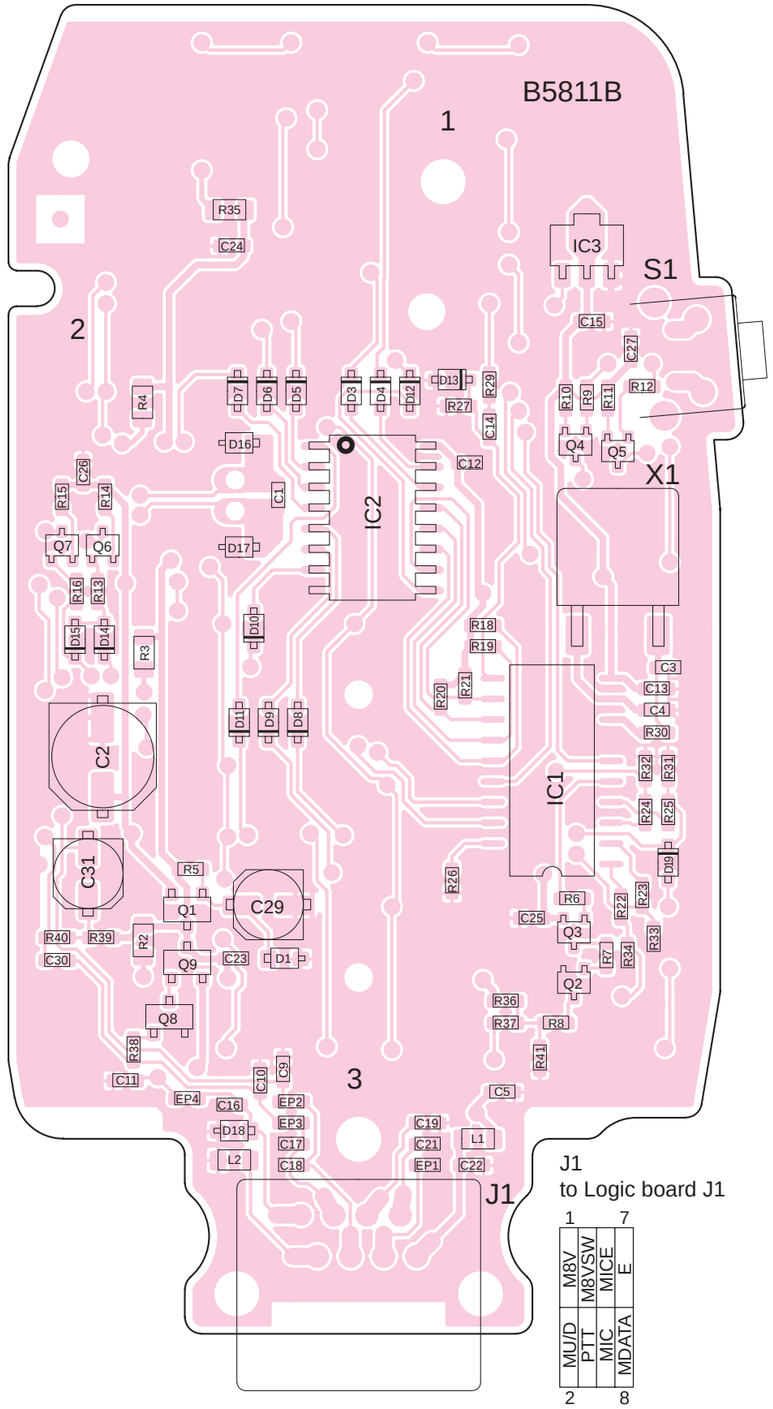

8-2 LOGIC BOARD

● TOP VIEW

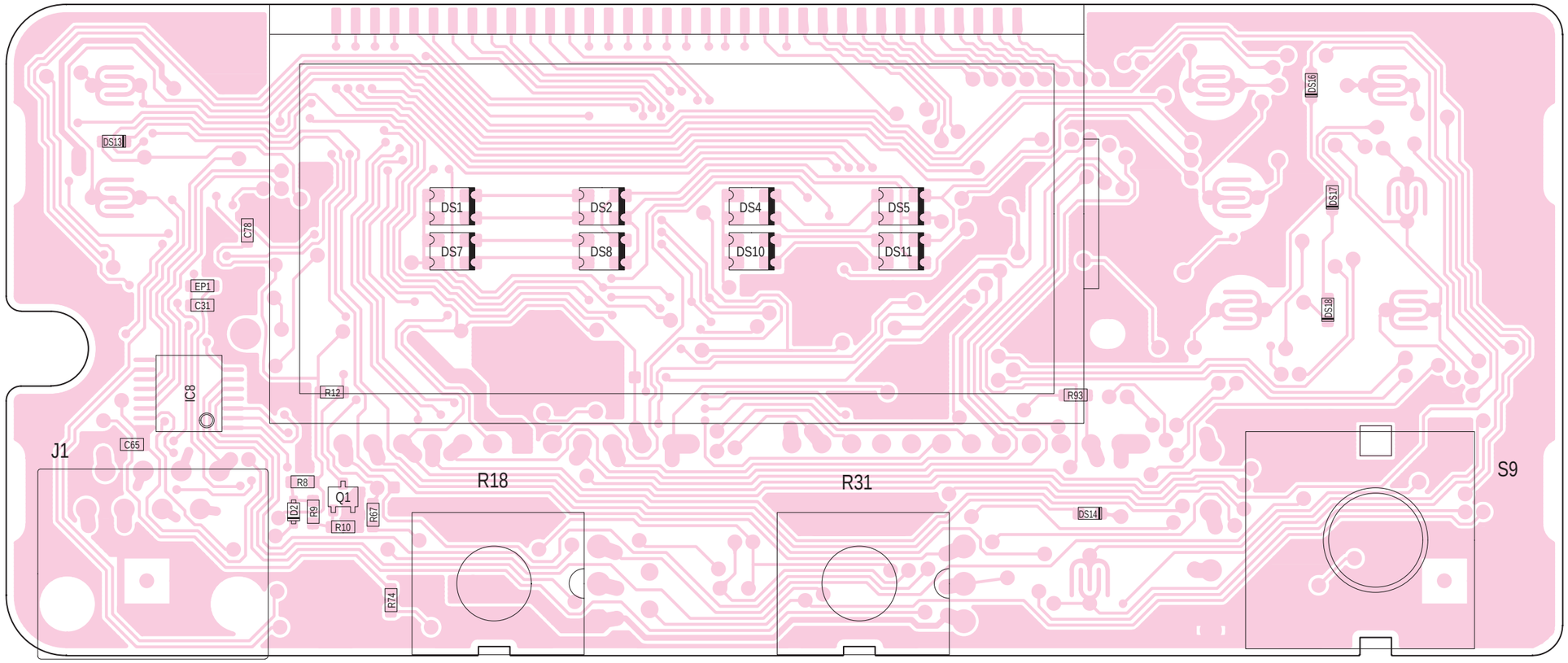

J1
From External Microphone

MICIN	GND	MIC	MICE	PTT	EXTMIC	MICUD	8V

8 1

● **BOTTOM VIEW**

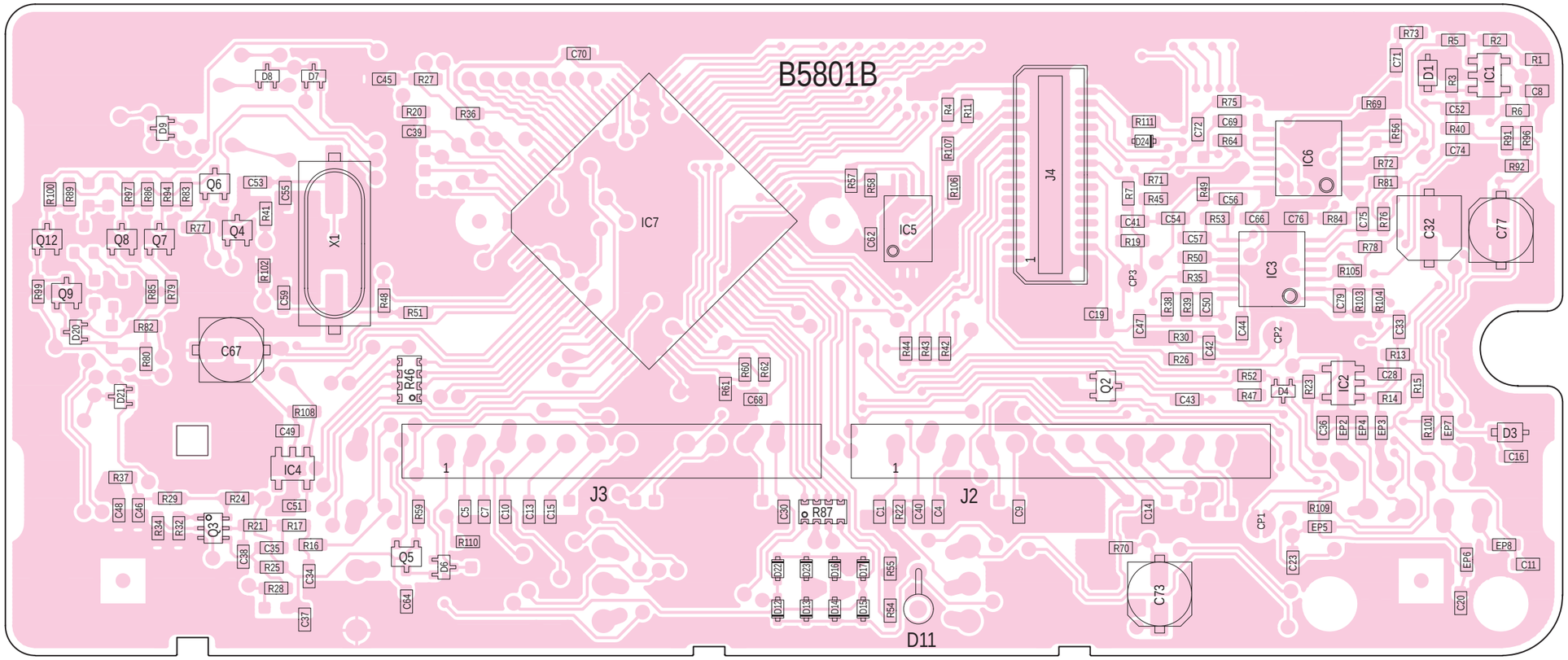

J4
to Optional unit

15	OPV1	SCK	16
	OPV2	SI	
	EXSTB	SO	
	GND	—	
	OPT3	OPT2/CCS	
	OPT2/CCS	—	
	OPT1	AFOUT	
		DETO	
	—	—	
	—	—	
	—	—	
	MICIN	—	
	MICOUT	—	
	—	+5V	
1	—	GND	30

J3
to Main unit J1

CLONE	POWON	LVIN	VOLOUT	C5V	+8V	EXSTB	GND	SO	PLLCK	PLLSTB	QS

1 — 12

J2
to Main unit J2

UNLK	MODIN	TEMP	SCK	OPV1	AFE	+5V	PDET	CTCSS	DETO	SD	NOIS

1 — 12

8-3 MAIN UNIT

● TOP VIEW

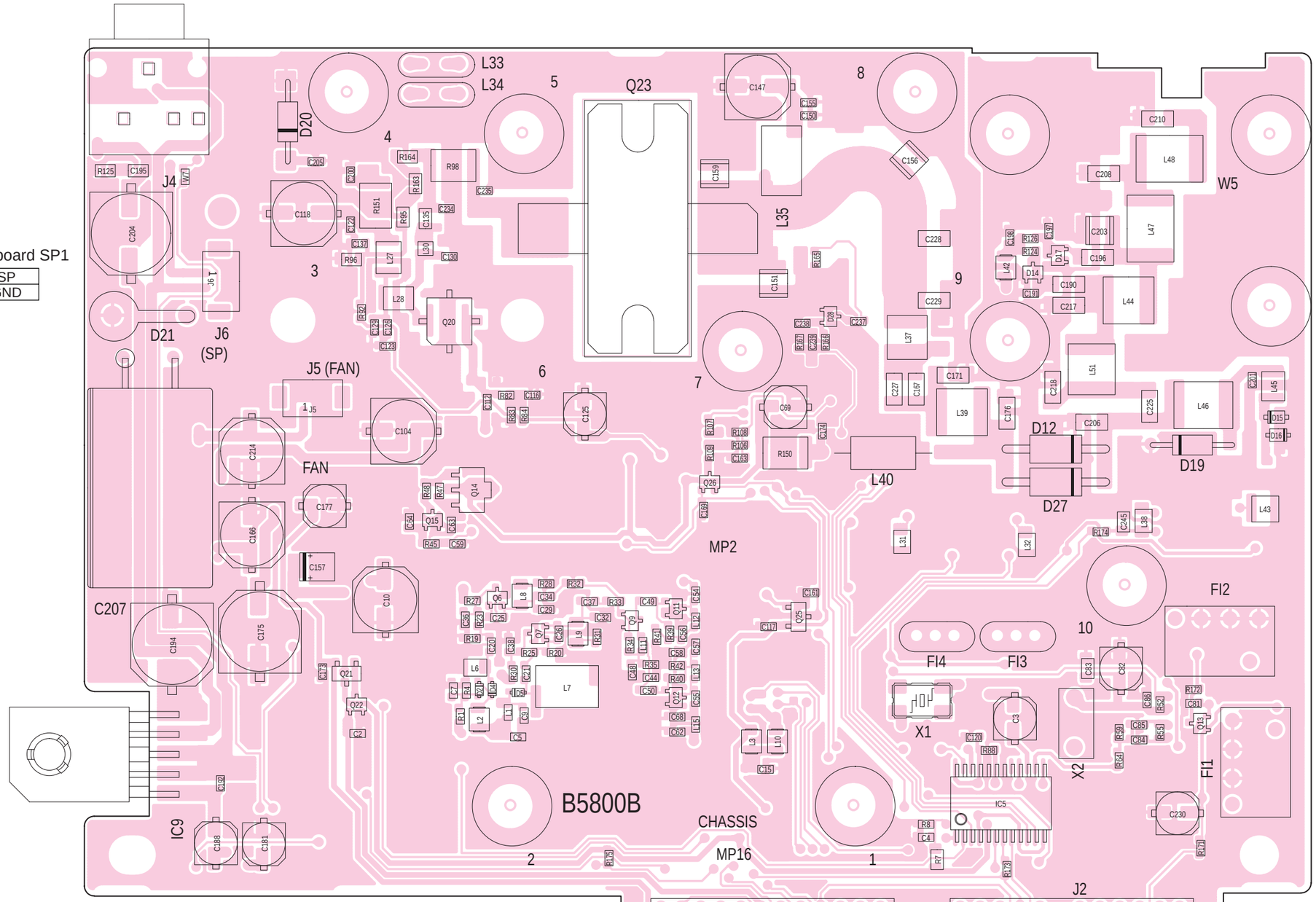

J5
to Chassis unit MF1

FANC	GND

1 2

J1
to Logic board J3

CLONE	
PWRON	
LVIN	
VOLOUT	
C5V	
+8V	
EXSTB	
GND	
SO	
PLLCK	
PLLSTB	
QS	

1 12

J2
to Logic board J2

UNLK	
MODIN	
TEMP	
SCK	
OPV1	
GND	
+5V	
PDET	
CTCSS	
DETO	
SD	
NOIS	

1 12

● **BOTTOM VIEW**

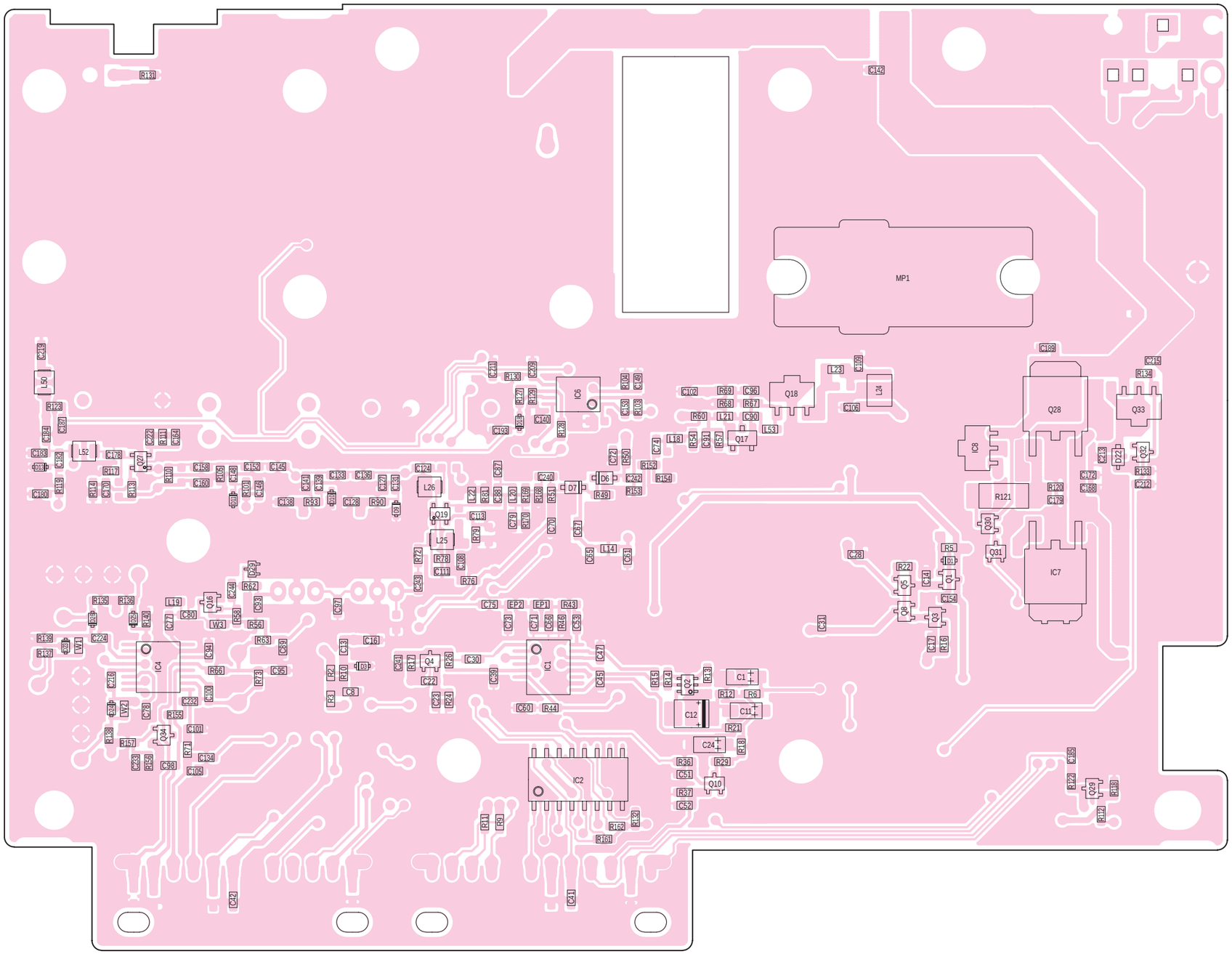
MP1
IC6
IC4
IC1
IC2
IC7
IC8
Q18
Q17
Q28
Q33
Q19
Q16
Q4
Q2
Q10
Q5
Q8
Q3
Q1
Q31
Q30
Q34
Q29
L52
L50
L26
L25
L24
L23
L53
L18
L14
L19
D7
D6
D1
D3
R121
C1
C11
C12
C24

SECTION 9 BLOCK DIAGRAM

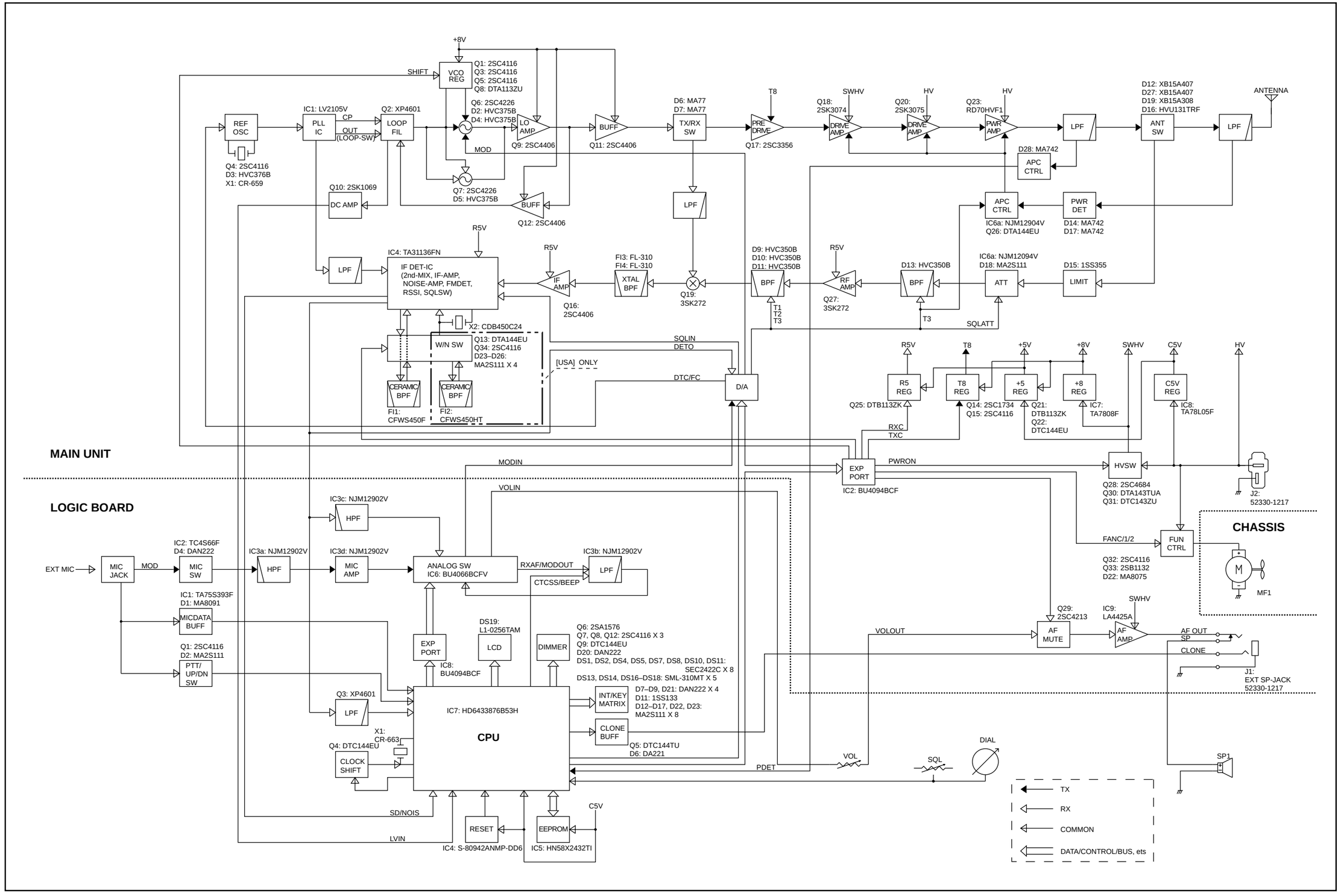

SECTION 10 VOLTAGE DIAGRAM

10-1 LOGIC BOARD

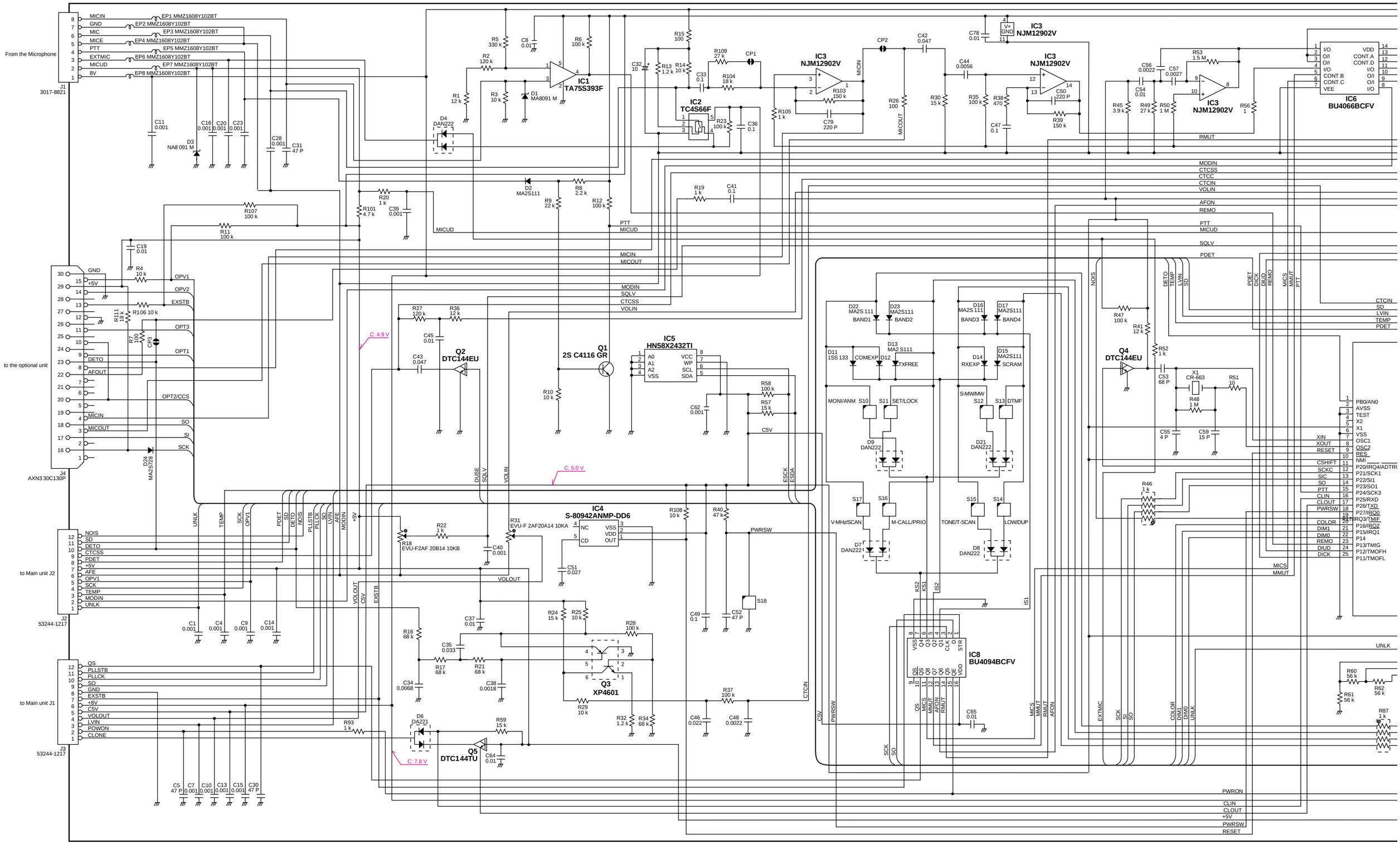

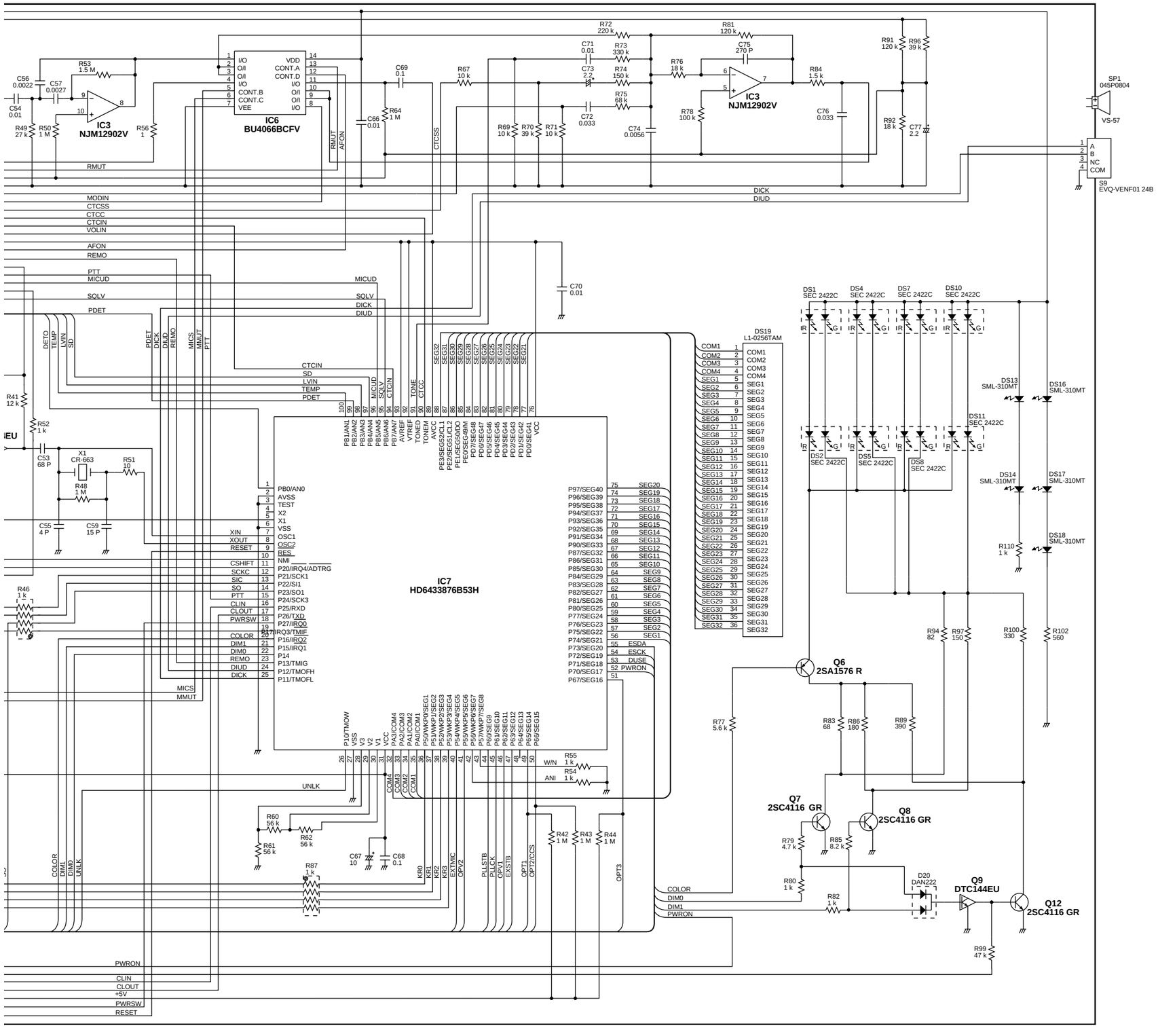
IC6
BU4066BCFV
IC3
NJM12902V
IC3
NJM12902V
IC7
HD6433876B53H
SP1
045P0804
VS-57
S9
EVQ-VENF01 24B
DS19
L1-0256TAM
DS1 SEC 2422C
DS2 SEC 2422C
DS4 SEC 2422C
DS5 SEC 2422C
DS7 SEC 2422C
DS8 SEC 2422C
DS10 SEC 2422C
DS11 SEC 2422C
DS13 SML-310MT
DS14 SML-310MT
DS16 SML-310MT
DS17 SML-310MT
DS18 SML-310MT
Q6 2SA1576 R
Q7 2SC4116 GR
Q8 2SC4116 GR
Q9 DTC144EU
Q12 2SC4116 GR
D20 DAN222
X1 CR-663
RMUT
MODIN
CTCSS
CTCC
CTCIN
VOLIN
AFON
REMO
PTT
MICUD
SOLV
PDET
DICK
DIUD
SD
LVIN
TEMP
DETO
MICS
MMUT
UNLK
COLOR
DIM1
DIM0
PWRON
CLIN
CLOUT
+5V
PWRSW
RESET

SECTION 10 VOLTAGE DIAGRAM

10-1 LOGIC BOARD

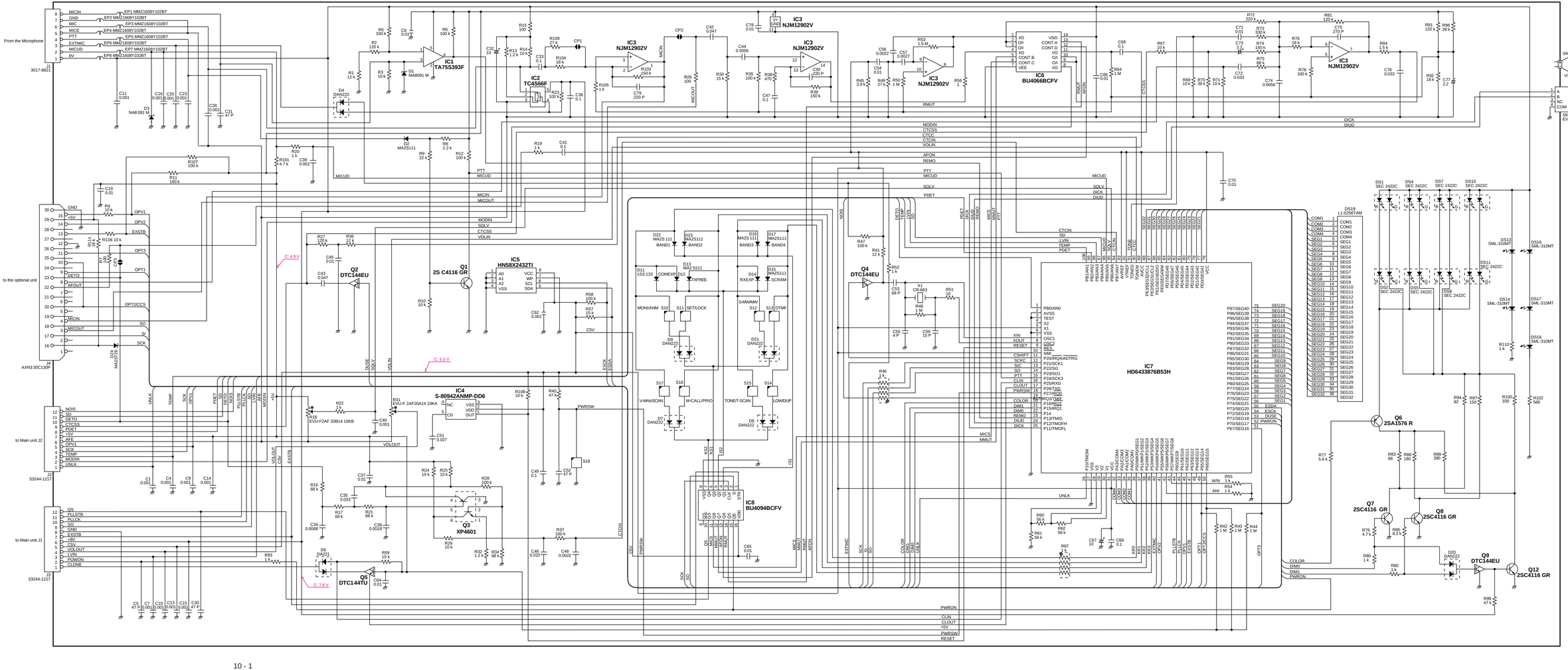

10-2 MAIN UNIT

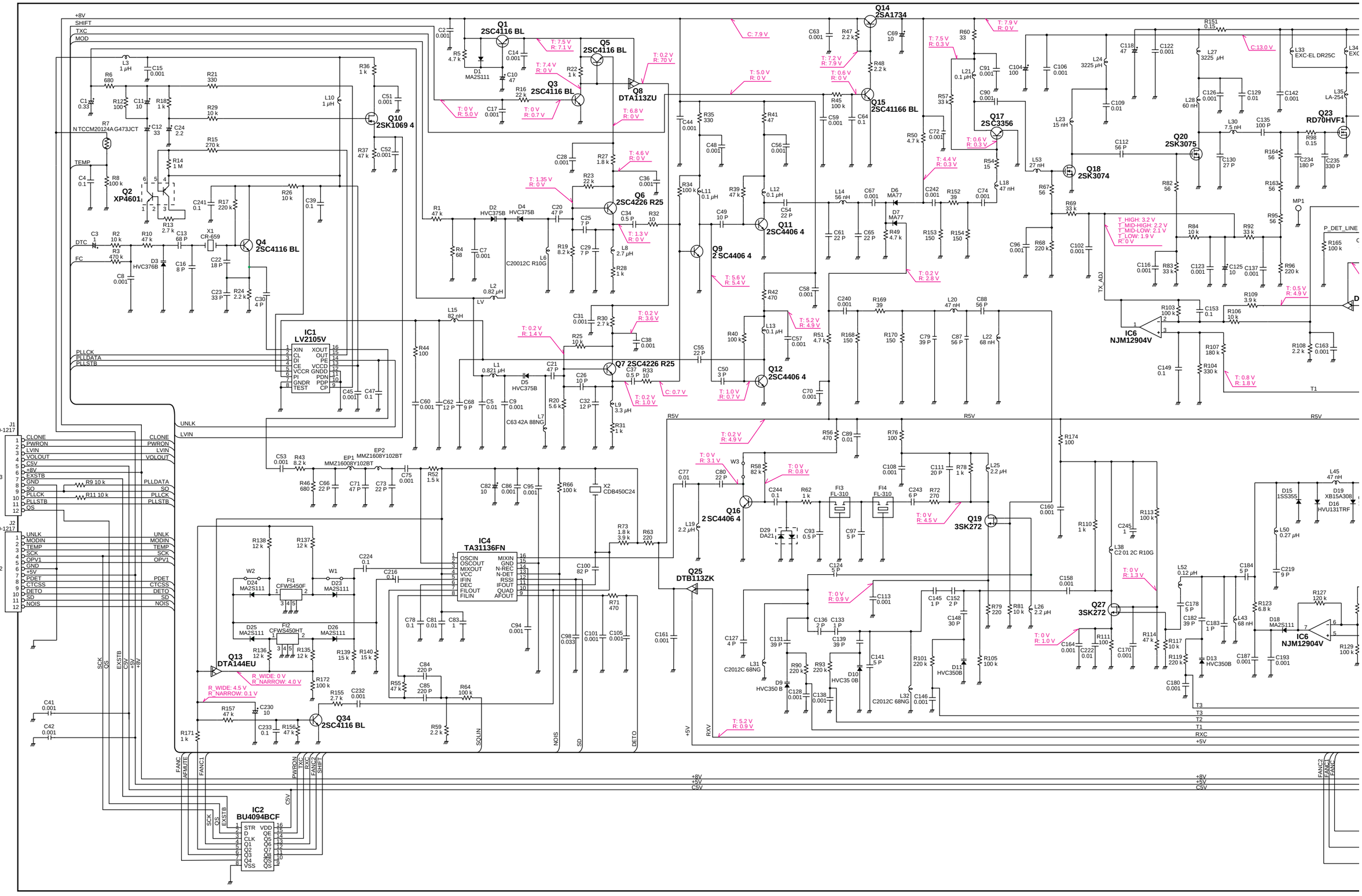

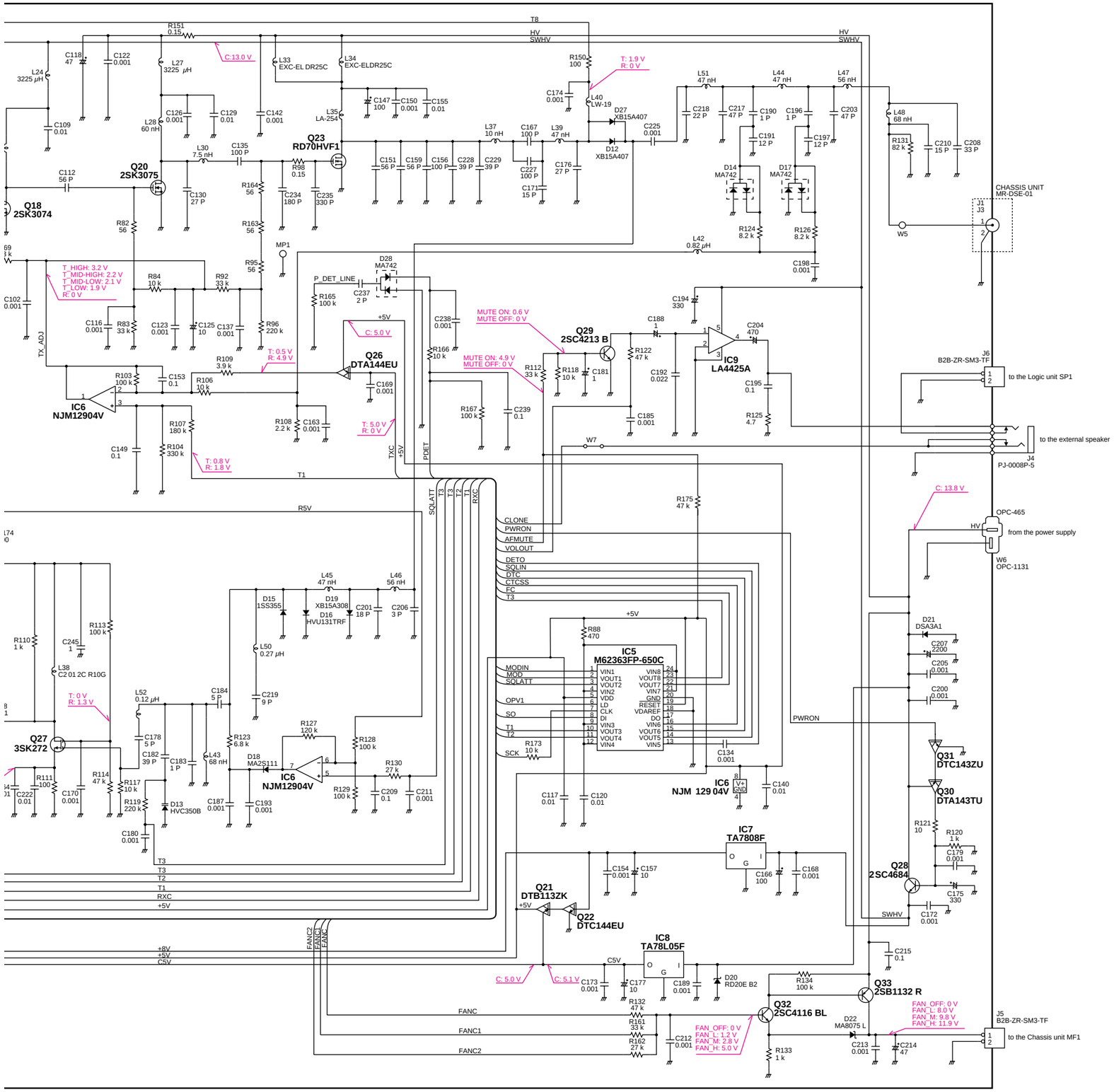
T8
HV
SWHV
R151 0.15
C:13.0 V
L24 3225 μH
C118 47
C122 0.001
L27 3225 μH
L33 EXC-EL DR25C
L34 EXC-ELDR25C
R150 100
T: 1.9 V R: 0 V
C174 0.001
L40 LW-19
D27 XB15A407
D12 XB15A407
L51 47 nH
L44 47 nH
L47 56 nH
C218 22 P
C217 47 P
C190 1 P
C191 12 P
C196 1 P
C197 12 P
C203 47 P
L48 68 nH
R131 82 k
C210 15 P
C208 33 P
C109 0.01
C126 0.001
C129 0.01
C142 0.001
L28 60 nH
L35 LA-254
C147 100
C150 0.001
C155 0.01
Q23 RD70HVF1
L37 10 nH
C167 100 P
L39 47 nH
C225 0.001
L30 7.5 nH
C135 100 P
R98 0.15
C151 56 P
C159 56 P
C156 100 P
C228 39 P
C229 39 P
C227 100 P
C176 27 P
C171 15 P
Q20 2SK3075
C112 56 P
Q18 2SK3074
C130 27 P
R164 56
C234 180 P
C235 330 P
D14 MA742
D17 MA742
R124 8.2 k
R126 8.2 k
CHASSIS UNIT MR-DSE-01
J1 J3
W5
R82 56
R163 56
L42 0.82 μH
C198 0.001
MP1
R95 56
D28 MA742
P_DET_LINE
C237 2 P
R165 100 k
T_HIGH: 3.2 V
T_MID-HIGH: 2.2 V
T_MID-LOW: 2.1 V
T_LOW: 1.9 V
R: 0 V
R84 10 k
R92 33 k
C102 0.001
C116 0.001
R83 33 k
C123 0.001
C125 10
C137 0.001
R96 220 k
C238 0.001
C194 330
MUTE ON: 0.6 V
MUTE OFF: 0 V
Q29 2SC4213 B
C188 1
C204 470
IC9 LA4425A
+5V
C: 5.0 V
R166 10 k
TX_ADJ
T: 0.5 V R: 4.9 V
Q26 DTA144EU
MUTE ON: 4.9 V
MUTE OFF: 0 V
R112 33 k
R118 10 k
C181 1
R122 47 k
C192 0.022
J6 B2B-ZR-SM3-TF
to the Logic unit SP1
R103 100 k
C153 0.1
R106 10 k
R109 3.9 k
C169 0.001
IC6 NJM12904V
R167 100 k
C239 0.1
C185 0.001
C195 0.1
R125 4.7
R107 180 k
R108 2.2 k
C163 0.001
T: 5.0 V R: 0 V
W7
to the external speaker
J4 PJ-0008P-5
C149 0.1
R104 330 k
T: 0.8 V R: 1.8 V
TXC
PDET
T1
R5V
SQLATT
T3
T2
RXC
R175 47 k
C: 13.8 V
OPC-465
HV
from the power supply
W6 OPC-1131
CLONE
PWRON
AFMUTE
VOLOUT
DETO
SQLIN
DTC
CTCSS
FC
T3
L45 47 nH
L46 56 nH
D15 1SS355
D19 XB15A308
D16 HVU131TRF
C201 18 P
C206 3 P
R88 470
IC5 M62363FP-650C
MODIN
MOD
SQLATT
OPV1
SO
T1
T2
SCK
VIN1
VOUT1
VOUT2
VIN2
VDD
LD
CLK
DI
VIN3
VOUT3
VOUT4
VIN4
VIN8
VOUT8
VOUT7
VIN7
GND
RESET
VDAREF
DO
VIN6
VOUT6
VOUT5
VIN5
D21 DSA3A1
C207 2200
C205 0.001
C200 0.001
R110 1 k
C245 1
R113 100 k
L38 C2 01 2C R10G
L50 0.27 μH
T: 0 V R: 1.3 V
L52 0.12 μH
C184 5 P
C219 9 P
Q27 3SK272
C178 5 P
C182 39 P
C183 1 P
L43 68 nH
R123 6.8 k
R127 120 k
R128 100 k
D18 MA2S111
IC6 NJM12904V
R130 27 k
R173 10 k
C134 0.001
IC6 NJM 129 04V
C140 0.01
Q31 DTC143ZU
Q30 DTA143TU
R111 100
C222 0.01
C170 0.001
R114 47 k
R117 10 k
R119 220 k
D13 HVC350B
C187 0.001
C193 0.001
R129 100 k
C209 0.1
C211 0.001
C117 0.01
C120 0.01
R121 10
R120 1 k
C179 0.001
C175 330
Q28 2SC4684
C172 0.001
C180 0.001
IC7 TA7808F
C154 0.001
C157 10
C166 100
C168 0.001
Q21 DTB113ZK
Q22 DTC144EU
FANC2
FANC1
FANC
+8V
+5V
C5V
IC8 TA78L05F
C215 0.1
C: 5.0 V
C: 5.1 V
C173 0.001
C177 10
C189 0.001
D20 RD20E B2
R134 100 k
Q33 2SB1132 R
R132 47 k
R161 33 k
R162 27 k
Q32 2SC4116 BL
FAN_OFF: 0 V
FAN_L: 1.2 V
FAN_M: 2.8 V
FAN_H: 5.0 V
D22 MA8075 L
FAN_OFF: 0 V
FAN_L: 8.0 V
FAN_M: 9.8 V
FAN_H: 11.9 V
J5 B2B-ZR-SM3-TF
to the Chassis unit MF1
C212 0.001
R133 1 k
C213 0.001
C214 47

10-2 MAIN UNIT

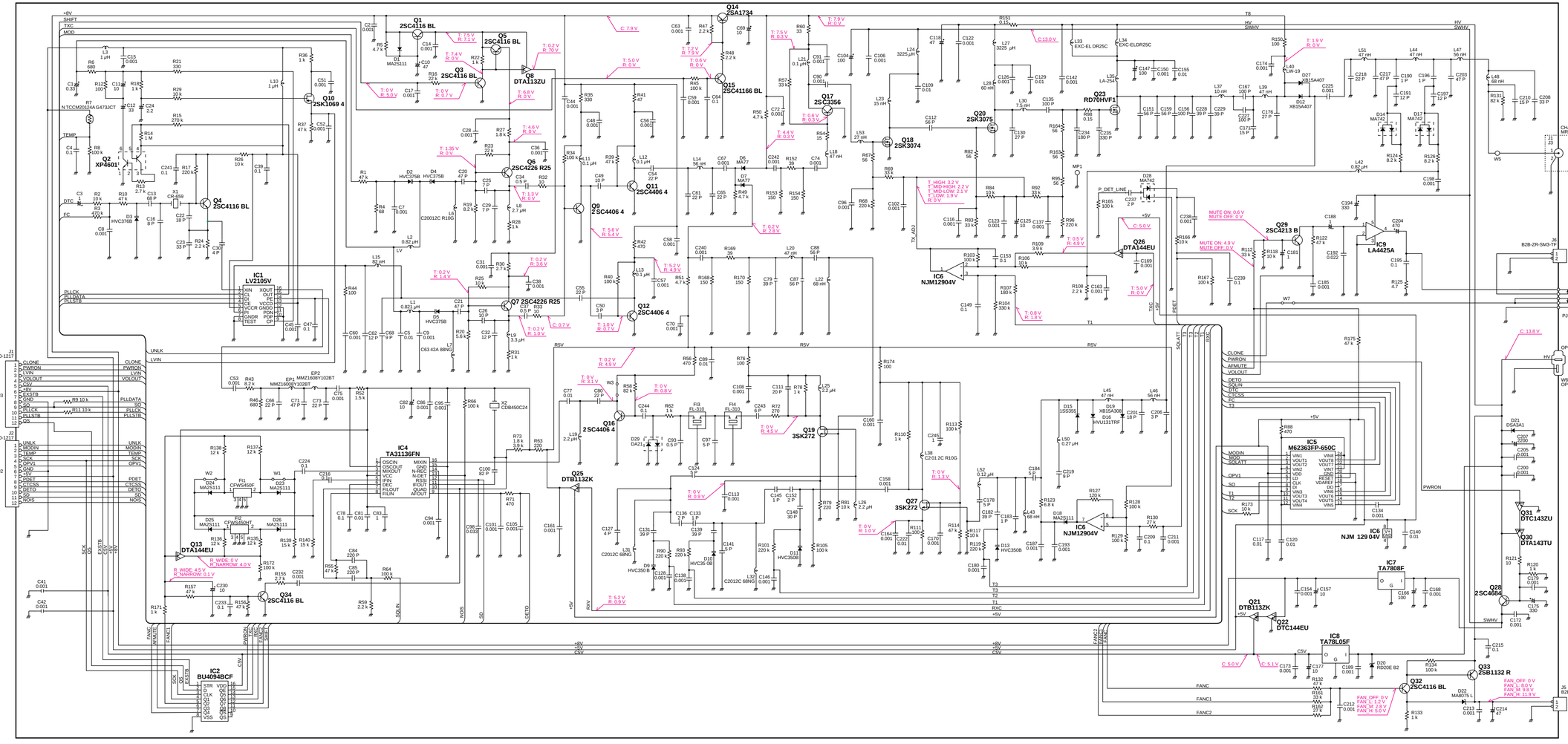

Icom Inc.

1-1-32, Kamiminami, Hirano-ku, Osaka 547-0003, Japan
Phone : +81 (06) 6793 5302
Fax : +81 (06) 6793 0013
URL : http://www.icom.co.jp/world/index.html

Icom America Inc.

<Corporate Headquarters>
2380 116th Avenue N.E., Bellevue, WA 98004, U.S.A.
Phone : +1 (425) 454-8155 Fax : +1 (425) 454-1509
URL : http://www.icomamerica.com
E-mail : sales@icomamerica.com
<Customer Service>
Phone : +1 (425) 454-7619

Icom Canada

Glenwood Centre #150-6165
Highway 17 Delta, B.C., V4K 5B8, Canada
Phone : +1 (604) 952-4266 Fax : +1 (604) 952-0090
URL : http://www.icomcanada.com
E-mail : info@icomcanada.com

Icom (Australia) Pty. Ltd.

Unit 1 / 103 Garden Road, Clayton VIC 3168 Australia
Phone : +61 (03) 9549-7500 Fax : +61 (03) 9549-7505
URL : http://www.icom.net.au
E-mail : sales@icom.net.au

Icom New Zealand

146A Harris Road, East Tamaki,
Auckland, New Zealand
Phone : +64 (09) 274 4062 Fax : +64 (09) 274 4708
URL : http://www.icom.co.nz
E-mail : inquiries@icom.co.nz

Beijing Icom Ltd.

10C07, Long silver Mansion, No.88, Yong Ding
Road, Haidian District, Beijing, 100039, China
Phone : +86 (010) 5889 5391/5392/5393
Fax : +86 (010) 5889 5395
E-mail : bjicom@bjicom.com
URL : http://www.bjicom.com

Icom (Europe) GmbH

Communication Equipment
Auf der Krautweide 24
65812 Bad Soden am Taunus, Germany
Phone : +49 (6196) 76685-0 Fax : +49 (6196) 76685-50
URL : http://www.icomeurope.com
E-mail : info@icomeurope.com

Icom Spain S.L

Ctra. Rubi, No. 88 Bajos A 08174, Sant Cugat del Valles, Barcelona, Spain
Phone : +34 (93) 590 26 70 Fax : +34 (93) 589 04 46
URL : http://www.icomspain.com
E-mail : icom@icomspain.com

Icom (UK) Ltd.

Unit 9, Sea St., Herne Bay, Kent, CT6 8LD, U.K.
Phone : +44 (01227) 741741 Fax : +44 (01227) 741742
URL : http://www.icomuk.co.uk
E-mail : info@icomuk.co.uk

Icom France s.a.s.

Zac de la Plaine
1 Rue Brindejonc des Moulinais BP 5804
31505 Toulouse Cedex, France
Phone : +33 (5) 61 36 03 03 Fax : +33 (5) 61 36 03 00
URL : http://www.icom-france.com
E-mail : icom@icom-france.com

Asia Icom Inc.

6F No.68, Sec. 1 Cheng-Teh Road, Taipei, Taiwan, R.O.C.
Phone : +886 (02) 2559 1899 Fax : +886 (02) 2559 1874
URL : http://www.asia-icom.com
E-mail : sales@asia-icom.com

Icom Polska

81-850 Sopot, ul. 3 Maja 54, Poland
Phone : +48 (58) 550 7135 Fax : +48 (58) 551 0484
E-mail : icompolska@icompolska.com.pl

Count on us!

Icom Inc.
1-1-32, Kamiminami, Hirano-ku, Osaka, 547-0003, Japan

S-13815IZ-C1
© 2002 Icom Inc.

Apr. 2009

SERVICE MANUAL ADDENDUM

IC-V8000

CONTENTS

PARTS LIST 1
BOARD LAYOUTS 6
VOLTAGE DIAGRAM 8

PARTS LIST

[LOGIC UNIT]

REF NO.	PARTS NO.	DESCRIPTION	M.	H/V LOCATION
WS1	8600036881	SP-1 (FX2493 P01LO)		
IC1	1110002861	S.IC TA75S393F(TE85R,F)	B	4.9/38.7
IC2	1130004201	S.IC TC4S66F(TE85R,F)	B	14.6/18.2
IC3	1110005340	S.IC NJM12902V-TE1-#ZZZB	B	19.4/25.8
IC4	1110005771	S.IC S-80942CNMC-G9CT2G	B	84.8/12.5
IC5	1130014960	S.IC R1EX24032ATA00A	B	43.7/28.5
IC6	1130008090	S.IC BU4066BCFV-E1	B	16.9/33.2
IC7	1140010611	S.IC HD6433876B55HV(FX-2509A-1) [TPE]	B	61/29
	1140010611	S.IC HD6433876B55HV(FX-2509A-1) [USA]		
	1140010611	S.IC HD6433876B55HV(FX-2509A-1) [KOR]		
	1140010611	S.IC HD6433876B55HV(FX-2509A-1) [AUS]		
	1140010611	S.IC HD6433876B55HV(FX-2509A-1) [SEA]		
	1140010611	S.IC HD6433876B55HV(FX-2509A-1) [CSA]		
	1140010611	S.IC HD6433876B55HV(FX-2509A-1) [USA-1]		
	1140010611	S.IC HD6433876B55HV(FX-2509A-1) [KOR-1]		
	1140010611	S.IC HD6433876B55HV(FX-2509A-1) [CSA-1]		
	1140010611	S.IC HD6433876B55HV(FX-2509A-1) [USA-2]		
	1140010611	S.IC HD6433876B55HV(FX-2509A-1) [USA-3]		
IC8	1130007570	S.IC BU4094BCFV-E2	T	12.2/17.5
Q1	1530002691	S.TRA 2SC4116-GR(TE85R,F)	T	22.5/10.6
Q2	1590000430	S.TRA DTC144EUA T106	B	30.5/18
Q3	1590001650	S.TRA XP4601(TX)	B	90.1/8.5
Q4	1590000430	S.TRA DTC144EUA T106	B	88.5/28.4
Q5	1590000660	S.TRA DTC144TU T106	B	77.2/6.6
Q6	1510000510	S.TRA 2SA1576A T106R	B	90/31.5
Q7	1530002691	S.TRA 2SC4116-GR(TE85R,F)	B	93.7/27.8
Q8	1530002691	S.TRA 2SC4116-GR(TE85R,F)	B	96.2/27.8
Q9	1590000430	S.TRA DTC144EUA T106	B	99.9/24.2
Q12	1530002691	S.TRA 2SC4116-GR(TE85R,F)	B	101.2/27.8
D1	1730002281	S.ZEN MAZ8091GML	B	9/38.9
D2	1790001251	S.DIO MA2S1110GL	T	19.2/9.6
D3	1730002281	S.ZEN MAZ8091GML	B	3.5/14.9
D4	1750000520	S.DIO DAN222TL	B	18.6/17.6
D6	1750000370	S.DIO DA221 TL	B	74.7/5.9
D7	1750000520	S.DIO DAN222TL	B	83.4/38.7
D8	1750000520	S.DIO DAN222TL	B	86.5/38.7
D9	1750000520	S.DIO DAN222TL	B	93.5/35.2
D11	1710000611	DIO 1SS133 T77 (26M/M) [TPE]		
	1710000611	DIO 1SS133 T77 (26M/M) [KOR]		
	1710000611	DIO 1SS133 T77 (26M/M) [AUS]		
	1710000611	DIO 1SS133 T77 (26M/M) [KOR-1]		
D13	1790001251	S.DIO MA2S1110GL [TPE]	B	50.5/3.1
	1790001251	S.DIO MA2S1110GL [USA]		
	1790001251	S.DIO MA2S1110GL [KOR]		
	1790001251	S.DIO MA2S1110GL [AUS]		
	1790001251	S.DIO MA2S1110GL [SEA]		
	1790001251	S.DIO MA2S1110GL [USA-1]		
	1790001251	S.DIO MA2S1110GL [KOR-1]		
	1790001251	S.DIO MA2S1110GL [THA-1]		
	1790001251	S.DIO MA2S1110GL [USA-2]		
	1790001251	S.DIO MA2S1110GL [USA-3]		
D15	1790001251	S.DIO MA2S1110GL [TPE]	B	46.7/3.1
	1790001251	S.DIO MA2S1110GL [USA]		
	1790001251	S.DIO MA2S1110GL [KOR]		
	1790001251	S.DIO MA2S1110GL [AUS]		
	1790001251	S.DIO MA2S1110GL [USA-1]		
	1790001251	S.DIO MA2S1110GL [KOR-1]		
	1790001251	S.DIO MA2S1110GL [THA-1]		
	1790001251	S.DIO MA2S1110GL [USA-2]		
	1790001251	S.DIO MA2S1110GL [USA-3]		
D16	1790001251	S.DIO MA2S1110GL [THA-1] only	B	48.6/5.8
D17	1790001251	S.DIO MA2S1110GL [TPE]	B	46.7/5.8
	1790001251	S.DIO MA2S1110GL [KOR]		
	1790001251	S.DIO MA2S1110GL [KOR-1]		
D20	1750000520	S.DIO DAN222TL	B	99.3/21.6
D21	1750000520	S.DIO DAN222TL	B	96.3/17.3
D22	1790001251	S.DIO MA2S1110GL [KOR]	B	52.4/5.8
	1790001251	S.DIO MA2S1110GL [SEA]		
	1790001251	S.DIO MA2S1110GL [KOR-1]		
D23	1790001251	S.DIO MA2S1110GL [TPE]	B	50.5/5.8
	1790001251	S.DIO MA2S1110GL [AUS]		
	1790001251	S.DIO MA2S1110GL [SEA]		
	1790001251	S.DIO MA2S1110GL [THA-1]		
D24	1790001241	S.DIO MA2S7280GL	B	27.9/34.3
X1	6050010870	S.XTA CR-663 SMD-49 9.200 MHz	B	82/27.5
R1	7030004780	S.RES ERJ3GEYF 123 V (12K)	B	1.7/39.8
R2	7030009550	S.RES ERJ3EKF 1203 V (120K)	B	4.5/41.1

[LOGIC UNIT]

REF NO.	PARTS NO.	DESCRIPTION	M.	H/V LOCATION
R3	7030003560	S.RES ERJ3GEYJ 103 V (10K)	B	7.4/38.4
R4	7030003560	S.RES ERJ3GEYJ 103 V (10K)	B	41/36.4
R5	7030005521	S.RES ERA3YKD 334V (330K)	B	7.3/41.1
R6	7030003680	S.RES ERJ3GEYJ 104 V (100K)	B	3/36.4
R7	7030003320	S.RES ERJ3GEYJ 101 V (100)	B	29/30.8
R8	7030003480	S.RES ERJ3GEYJ 222 V (2.2K)	T	19.8/11.6
R9	7030003600	S.RES ERJ3GEYJ 223 V (22K)	T	20.5/9.6
R10	7030003560	S.RES ERJ3GEYJ 103 V (10K)	T	22.5/8.6
R11	7030003680	S.RES ERJ3GEYJ 104 V (100K)	B	39.7/36.3
R12	7030003680	S.RES ERJ3GEYJ 104 V (100K)	T	21.7/17.6
R13	7030003450	S.RES ERJ3GEYJ 122 V (1.2K)	B	11/20.1
R14	7030003560	S.RES ERJ3GEYJ 103 V (10K)	B	11.5/17.2
R15	7030003320	S.RES ERJ3GEYJ 101 V (100)	B	9.7/18
R16	7030003660	S.RES ERJ3GEYJ 683 V (68K)	B	83.6/7.4
R17	7030003660	S.RES ERJ3GEYJ 683 V (68K)	B	84.7/8.7
R18	7210001860	VAR EVU-F2AF20 B14 (10KB)		
R19	7030003440	S.RES ERJ3GEYJ 102 V (1K)	B	28.7/27.7
R20	7030003440	S.RES ERJ3GEYJ 102 V (1K)	B	76.7/36.3
R21	7030003660	S.RES ERJ3GEYJ 683 V (68K)	B	87.3/8.7
R22	7030003440	S.RES ERJ3GEYJ 102 V (1K)	B	44.3/9.6
R23	7030003680	S.RES ERJ3GEYJ 104 V (100K)	B	16.9/17.9
R24	7030003580	S.RES ERJ3GEYJ 153 V (15K)	B	88.5/10.5
R25	7030003560	S.RES ERJ3GEYJ 103 V (10K)	B	86.2/5.9
R26	7030003320	S.RES ERJ3GEYJ 101 V (100)	B	25.5/19.8
R27	7030003690	S.RES ERJ3GEYJ 124 V (120K)	B	75.9/38.5
R28	7030003680	S.RES ERJ3GEYJ 104 V (100K)	B	85.9/4.5
R29	7030003560	S.RES ERJ3GEYJ 103 V (10K)	B	93/10.5
R30	7030003580	S.RES ERJ3GEYJ 153 V (15K)	B	25.5/21.3
R31	7210001870	VAR EVU-F2AF20 A14 (10KA)		
R32	7030003450	S.RES ERJ3GEYJ 122 V (1.2K)	B	92.4/8.5
R34	7030003660	S.RES ERJ3GEYJ 683 V (68K)	B	93.8/8.5
R35	7030003680	S.RES ERJ3GEYJ 104 V (100K)	B	24.5/25.3
R36	7030003570	S.RES ERJ3GEYJ 123 V (12K)	B	73.1/36.2
R37	7030003680	S.RES ERJ3GEYJ 104 V (100K)	B	96.3/11.9
R38	7030003400	S.RES ERJ3GEYJ 471 V (470)	B	26.4/23.4
R39	7030003700	S.RES ERJ3GEYJ 154 V (150K)	B	25.1/23.4
R40	7030003640	S.RES ERJ3GEYJ 473 V (47K)	B	7/35.2
R41	7030003570	S.RES ERJ3GEYJ 123 V (12K)	B	86.6/29.5
R42	7030003800	S.RES ERJ3GEYJ 105 V (1M)	B	41.2/20.5
R43	7030003800	S.RES ERJ3GEYJ 105 V (1M)	B	42.5/20.5
R44	7030003800	S.RES ERJ3GEYJ 105 V (1M)	B	43.8/20.5
R45	7030003510	S.RES ERJ3GEYJ 392 V (3.9K)	B	27.1/30.5
R46	7410000950	S.ARR EXB-V8V 102JV	B	77/18.4
R47	7030003680	S.RES ERJ3GEYJ 104 V (100K)	B	20.9/17.4
R48	7030003800	S.RES ERJ3GEYJ 105 V (1M)	B	78.7/23.7
R49	7030003610	S.RES ERJ3GEYJ 273 V (27K)	B	24/31.1
R50	7030003800	S.RES ERJ3GEYJ 105 V (1M)	B	24.5/26.6
R51	7030003200	S.RES ERJ3GEYJ 100 V (10)	B	76.6/22.9
R52	7030003440	S.RES ERJ3GEYJ 102 V (1K)	B	20.9/18.7
R53	7030003820	S.RES ERJ3GEYJ 155 V (1.5M)	B	23/29.2
R54	7030003440	S.RES ERJ3GEYJ 102 V (1K) [TPE]	B	44.9/3
	7030003440	S.RES ERJ3GEYJ 102 V (1K) [USA]		
	7030003440	S.RES ERJ3GEYJ 102 V (1K) [KOR]		
	7030003440	S.RES ERJ3GEYJ 102 V (1K) [AUS]		
	7030003440	S.RES ERJ3GEYJ 102 V (1K) [USA-1]		
	7030003440	S.RES ERJ3GEYJ 102 V (1K) [KOR-1]		
	7030003440	S.RES ERJ3GEYJ 102 V (1K) [THA-1]		
	7030003440	S.RES ERJ3GEYJ 102 V (1K) [USA-2]		
	7030003440	S.RES ERJ3GEYJ 102 V (1K) [USA-3]		
R55	7030003440	S.RES ERJ3GEYJ 102 V (1K) [TPE]	B	44.9/5.8
	7030003440	S.RES ERJ3GEYJ 102 V (1K) [USA]		
	7030003440	S.RES ERJ3GEYJ 102 V (1K) [KOR]		
	7030003440	S.RES ERJ3GEYJ 102 V (1K) [AUS]		
	7030003440	S.RES ERJ3GEYJ 102 V (1K) [SEA]		
	7030003440	S.RES ERJ3GEYJ 102 V (1K) [CSA]		
	7030003440	S.RES ERJ3GEYJ 102 V (1K) [USA-1]		
	7030003440	S.RES ERJ3GEYJ 102 V (1K) [KOR-1]		
	7030003440	S.RES ERJ3GEYJ 102 V (1K) [THA-1]		
	7030003440	S.RES ERJ3GEYJ 102 V (1K) [CSA-1]		
R56	7030004050	S.RES ERJ3GEYJ 1R0 V (1)	B	11.1/35
R57	7030003580	S.RES ERJ3GEYJ 153 V (15K)	B	47.5/31.7
R58	7030003680	S.RES ERJ3GEYJ 104 V (100K)	B	46.2/31.4
R59	7030003580	S.RES ERJ3GEYJ 153 V (15K)	B	76.4/9.6
R60	7030003650	S.RES ERJ3GEYJ 563 V (56K)	B	54.6/19.1
R61	7030003650	S.RES ERJ3GEYJ 563 V (56K)	B	55.9/17.8
R62	7030003650	S.RES ERJ3GEYJ 563 V (56K)	B	53.3/19.1
R64	7030003800	S.RES ERJ3GEYJ 105 V (1M)	B	22.2/34.4
R67	7030003560	S.RES ERJ3GEYJ 103 V (10K)	T	24.5/9.4
R69	7030003560	S.RES ERJ3GEYJ 103 V (10K)	B	12.6/36.9
R70	7030003630	S.RES ERJ3GEYJ 393 V (39K)	B	29.5/7.2
R71	7030003560	S.RES ERJ3GEYJ 103 V (10K)	B	27.1/31.8
R72	7030003720	S.RES ERJ3GEYJ 224 V (220K)	B	11.8/32.9
R73	7030003740	S.RES ERJ3GEYJ 334 V (330K)	B	10.1/41.6
R74	7030003700	S.RES ERJ3GEYJ 154 V (150K)	T	25.7/3.7
R75	7030003660	S.RES ERJ3GEYJ 683 V (68K)	B	22.2/37
R76	7030003590	S.RES ERJ3GEYJ 183 V (18K)	B	11.9/29.1
R77	7030003530	S.RES ERJ3GEYJ 562 V (5.6K)	B	91.1/28.6
R78	7030003680	S.RES ERJ3GEYJ 104 V (100K)	B	12.8/27.3
R79	7030003520	S.RES ERJ3GEYJ 472 V (4.7K)	B	92.9/24.3
R80	7030003440	S.RES ERJ3GEYJ 102 V (1K)	B	94.6/19.8
R81	7030003690	S.RES ERJ3GEYJ 124 V (120K)	B	11.8/31.6
R82	7030003440	S.RES ERJ3GEYJ 102 V (1K)	B	94.6/22
R83	7030003300	S.RES ERJ3GEYJ 680 V (68)	B	91.9/30.8
R84	7030003460	S.RES ERJ3GEYJ 152 V (1.5K)	B	15.2/29.2
R85	7030003550	S.RES ERJ3GEYJ 822 V (8.2K)	B	94.2/24.3
R86	7030003350	S.RES ERJ3GEYJ 181 V (180)	B	94.5/30.8
R87	7410000950	S.ARR EXB-V8V 102JV	B	49.4/9.6
R89	7030003390	S.RES ERJ3GEYJ 391 V (390)	B	99.7/30.8

M.=Mounted side (T: Mounted on the Top side, B: Mounted on the Bottom side)
S.=Surface mount

[LOGIC UNIT]

REF NO.	PARTS NO.	DESCRIPTION		M.	H/V LOCATION
R91	7030003690	S.RES ERJ3GEYJ 124 V (120K)		B	3.7/34.5
R92	7030003590	S.RES ERJ3GEYJ 183 V (18K)		B	3/32.7
R93	7030003440	S.RES ERJ3GEYJ 102 V (1K)		T	71.4/17.4
R94	7030003310	S.RES ERJ3GEYJ 820 V (82)		B	93.2/30.8
R96	7030003630	S.RES ERJ3GEYJ 393 V (39K)		B	2.4/34.5
R97	7030003340	S.RES ERJ3GEYJ 151 V (150)		B	95.8/30.8
R99	7030003640	S.RES ERJ3GEYJ 473 V (47K)		B	101.8/24.3
R100	7030003380	S.RES ERJ3GEYJ 331 V (330)		B	101/30.8
R101	7030003520	S.RES ERJ3GEYJ 472 V (4.7K)		B	9/15.2
R102	7030003410	S.RES ERJ3GEYJ 561 V (560)		B	86.7/25.7
R103	7030003700	S.RES ERJ3GEYJ 154 V (150K)		B	13.6/23.7
R104	7030003590	S.RES ERJ3GEYJ 183 V (18K)	[TPE]	B	12.3/23.7
	7030003670	S.RES ERJ3GEYJ 823 V (82K)	[USA]		
	7030003590	S.RES ERJ3GEYJ 183 V (18K)	[KOR]		
	7030003590	S.RES ERJ3GEYJ 183 V (18K)	[AUS]		
	7030003590	S.RES ERJ3GEYJ 183 V (18K)	[SEA]		
	7030003590	S.RES ERJ3GEYJ 183 V (18K)	[CSA]		
	7030003670	S.RES ERJ3GEYJ 823 V (82K)	[USA-1]		
	7030003590	S.RES ERJ3GEYJ 183 V (18K)	[KOR-1]		
	7030003590	S.RES ERJ3GEYJ 183 V (18K)	[THA-1]		
	7030003590	S.RES ERJ3GEYJ 183 V (18K)	[CSA-1]		
	7030003670	S.RES ERJ3GEYJ 823 V (82K)	[USA-2]		
	7030003670	S.RES ERJ3GEYJ 823 V (82K)	[USA-3]		
R105	7030003440	S.RES ERJ3GEYJ 102 V (1K)		B	14.2/25.7
R106	7030003560	S.RES ERJ3GEYJ 103 V (10K)		B	40.6/31.2
R107	7030003680	S.RES ERJ3GEYJ 104 V (100K)		B	41/33.8
R108	7030003560	S.RES ERJ3GEYJ 103 V (10K)		B	84/16.3
R109	7030003610	S.RES ERJ3GEYJ 273 V (27K)	[USA]	B	16.2/9.9
	7030003610	S.RES ERJ3GEYJ 273 V (27K)	[USA-1]		
	7030003610	S.RES ERJ3GEYJ 273 V (27K)	[USA-2]		
	7030003610	S.RES ERJ3GEYJ 273 V (27K)	[USA-3]		
R110	7030003440	S.RES ERJ3GEYJ 102 V (1K)		B	73.1/7.6
R111	7030003590	S.RES ERJ3GEYJ 183 V (18K)		B	27.9/35.6
C1	4030006860	S.CER C1608 JB 1H 102K-T		B	45.6/9.6
C4	4030006860	S.CER C1608 JB 1H 102K-T		B	41.7/9.6
C5	4030007090	S.CER C1608 CH 1H 470J-T		B	73.3/9.6
C7	4030006860	S.CER C1608 JB 1H 102K-T		B	72/9.6
C8	4030006900	S.CER C1608 JB 1H 103K-T		B	1.7/37.7
C9	4030006860	S.CER C1608 JB 1H 102K-T		B	36.3/9.6
C10	4030006860	S.CER C1608 JB 1H 102K-T		B	70.6/9.6
C11	4030006860	S.CER C1608 JB 1H 102K-T		B	2.3/6.1
C13	4030006860	S.CER C1608 JB 1H 102K-T		B	69/9.6
C14	4030006860	S.CER C1608 JB 1H 102K-T		B	27.7/9.6
C15	4030006860	S.CER C1608 JB 1H 102K-T		B	67.6/9.6
C16	4030006860	S.CER C1608 JB 1H 102K-T		B	3.1/13.3
C19	4030006900	S.CER C1608 JB 1H 103K-T		B	31.1/22.8
C20	4030006860	S.CER C1608 JB 1H 102K-T		B	6.8/3.5
C23	4030006860	S.CER C1608 JB 1H 102K-T		B	18/6.2
C28	4030006860	S.CER C1608 JB 1H 102K-T		B	11.5/18.8
C30	4030007090	S.CER C1608 CH 1H 470J-T		B	52/9.6
C31	4030007090	S.CER C1608 CH 1H 470J-T		T	13.1/23.4
C32	4510008540	S.ELE EEE1CA100SR		B	8.9/28.5
C33	4030011600	S.CER C1608 JB 1E 104K-T		B	10.9/21.9
C34	4030009880	S.CER C1608 JB 1H 682K-T		B	83.7/5.3
C35	4030008900	S.CER C1608 JB 1H 333K-T		B	86.2/7.2
C36	4030011600	S.CER C1608 JB 1E 104K-T		B	16/15.2
C37	4030006900	S.CER C1608 JB 1H 103K-T		B	84/2.4
C38	4030009970	S.CER C1608 JB 1H 182K-T		B	88.1/6.6
C39	4030006860	S.CER C1608 JB 1H 102K-T		B	76.7/35
C40	4030006860	S.CER C1608 JB 1H 102K-T		B	43/9.6
C41	4030011600	S.CER C1608 JB 1E 104K-T		B	28.7/29
C42	4030008920	S.CER C1608 JB 1H 473K-T		B	23.6/20.5
C43	4030008920	S.CER C1608 JB 1H 473K-T		B	25/17.1
C44	4030008770	S.CER C1608 JB 1H 562K-T		B	21.4/21.8
C45	4030006900	S.CER C1608 JB 1H 103K-T		B	78.7/38.5
C46	4030008880	S.CER C1608 JB 1H 223K-T		B	95.1/9.7
C47	4030011600	S.CER C1608 JB 1E 104K-T		B	28.2/22
C48	4030006870	S.CER C1608 JB 1H 222K-T		B	96.4/9.7
C49	4030011600	S.CER C1608 JB 1E 104K-T		B	85.1/15
C50	4030007170	S.CER C1608 CH 1H 221J-T		B	23.8/23.4
C51	4030008890	S.CER C1608 JB 1H 273K-T		B	84.7/10
C52	4030007090	S.CER C1608 CH 1H 470J-T		B	7/36.5
C53	4030007100	S.CER C1608 CH 1H 560J-T	[TPE]	B	87.3/31.6
	4030007100	S.CER C1608 CH 1H 560J-T	[USA]		
	4030007100	S.CER C1608 CH 1H 560J-T	[KOR]		
	4030007100	S.CER C1608 CH 1H 560J-T	[AUS]		
	4030007100	S.CER C1608 CH 1H 560J-T	[SEA]		
	4030007100	S.CER C1608 CH 1H 560J-T	[CSA]		
	4030007100	S.CER C1608 CH 1H 560J-T	[USA-1]		
	4030007100	S.CER C1608 CH 1H 560J-T	[KOR-1]		
	4030007110	S.CER C1608 CH 1H 680J-T	[THA-1]		
	4030007100	S.CER C1608 CH 1H 560J-T	[CSA-1]		
	4030007100	S.CER C1608 CH 1H 560J-T	[USA-2]		
	4030007100	S.CER C1608 CH 1H 560J-T	[USA-3]		
C54	4030006900	S.CER C1608 JB 1H 103K-T		B	26/29.2
C56	4030006870	S.CER C1608 JB 1H 222K-T		B	22.1/30.5
C57	4030008470	S.CER C1608 JB 1H 272K-T		B	24.5/27.9
C59	4030006990	S.CER C1608 CH 1H 080D-T		B	85.4/23.9
C62	4030006860	S.CER C1608 JB 1H 102K-T		B	46.2/27.8
C64	4030006900	S.CER C1608 JB 1H 103K-T		B	77.2/3.6
C65	4030006900	S.CER C1608 JB 1H 103K-T		T	8.4/14.1
C66	4030006900	S.CER C1608 JB 1H 103K-T		B	20.4/29.2
C67	4510008540	S.ELE EEE1CA100SR		B	88.9/20.4
C68	4030011600	S.CER C1608 JB 1E 104K-T		B	53.9/17.1
C69	4030011600	S.CER C1608 JB 1E 104K-T		B	22.2/35.7
C70	4030006900	S.CER C1608 JB 1H 103K-T		B	65.7/40.2
C71	4030006900	S.CER C1608 JB 1H 103K-T		B	11.1/39.7
C72	4030008900	S.CER C1608 JB 1H 333K-T		B	24.3/35.1
C73	4510008530	S.ELE EEE1HA2R2SR		B	26.9/4.1
C74	4030008770	S.CER C1608 JB 1H 562K-T		B	7/33.8
C75	4030011280	S.CER C1608 CH 1H 271J-T		B	13.3/29.1
C76	4030008900	S.CER C1608 JB 1H 333K-T		B	17.8/29.2

[LOGIC UNIT]

REF NO.	PARTS NO.	DESCRIPTION		M.	H/V LOCATION
C77	4510008530	S.ELE EEE1HA2R2SR		B	4.1/28.4
C78	4030006900	S.CER C1608 JB 1H 103K-T		T	16.1/28.4
C79	4030007170	S.CER C1608 CH 1H 221J-T		B	14.9/23.7
J1	6450002210	CON 3017-8821 <KIN>			
J2	6510020882	CON 53244-1218			
J3	6510020882	CON 53244-1218			
J4	6510021970	S.CON AXN330C130P		B	34.2/32.1
DS1	5040001760	S.LED SEC 2422C		T	29.8/30
DS2	5040001760	S.LED SEC 2422C		T	39.8/30
DS4	5040001760	S.LED SEC 2422C		T	49.8/30
DS5	5040001760	S.LED SEC 2422C		T	59.8/30
DS7	5040001760	S.LED SEC 2422C		T	29.8/27
DS8	5040001760	S.LED SEC 2422C		T	39.8/27
DS10	5040001760	S.LED SEC 2422C		T	49.8/27
DS11	5040001760	S.LED SEC 2422C		T	59.8/27
DS13	5040002420	S.LED SML-310MT T86		T	7.2/34.3
DS14	5040002420	S.LED SML-310MT T86		T	72.4/9.5
DS16	5040002420	S.LED SML-310MT T86		T	87.2/38.1
DS17	5040002420	S.LED SML-310MT T86		T	88.6/30.6
DS18	5040002420	S.LED SML-310MT T86		T	88.3/23.1
DS19	5030002250	LCD L1-0256TAM			
S9	2250000370	ENC EVQ-VENF0124B			
SP1	2510001150	SPE 045P0804 <FG>			
EP1	6910012350	S.BEA MMZ1608Y 102BT		T	13.1/24.7
EP2	6910012350	S.BEA MMZ1608Y 102BT		B	14.7/15.2
EP3	6910012350	S.BEA MMZ1608Y 102BT		B	12.1/15.2
EP4	6910012350	S.BEA MMZ1608Y 102BT		B	13.4/15.2
EP5	6910012350	S.BEA MMZ1608Y 102BT		B	16.2/8.6
EP6	6910012350	S.BEA MMZ1608Y 102BT		B	6.4/6.4
EP7	6910012350	S.BEA MMZ1608Y 102BT		B	7.7/15.2
EP8	6910012350	S.BEA MMZ1608Y 102BT		B	3.9/7.4

M.=Mounted side (T: Mounted on the Top side, B: Mounted on the Bottom side)

S.=Surface mount

[MAIN UNIT]

REF NO.	PARTS NO.	DESCRIPTION		M.	H/V LOCATION
IC1	1130008351	S.IC LV2105V-TLM-E		B	68.3/28.4
IC2	1130007700	S.IC BU4094BCF-E2		B	65.3/17.2
IC4	1110003201	S.IC TA31136FNG(EL)		B	107.5/28.5
IC5	1190000350	S.IC M62363FP-650C		T	91.9/19.4
IC6	1110005330	S.IC NJM12904V-TE1-#ZZZB		B	65.3/55.9
IC7	1180001251	S.IC TA7808F(TE16L,Q)		B	17.3/37.6
IC8	1180000421	S.IC TA78L05F(TE12R,F)		B	25.1/50.5
IC9	1110003091	IC LA4425A-E			
Q1	1530002851	S.TRA 2SC4116-BL(TE85R,F)		B	28/37.3
Q2	1590001650	S.TRA XP4601(TX)		B	54.3/26.7
Q3	1530002851	S.TRA 2SC4116-BL(TE85R,F)		B	29.4/33.5
Q4	1530002851	S.TRA 2SC4116-BL(TE85R,F)		B	80.2/29.1
Q5	1530002851	S.TRA 2SC4116-BL(TE85R,F)		B	32.5/36.7
Q6	1530002920	S.TRA 2SC4226-T1 R25		T	41.4/40
Q7	1530002920	S.TRA 2SC4226-T1 R25		T	45.5/36.4
Q8	1590001040	S.TRA DTA113ZU T106		B	32.5/34.1
Q9	1530003221	S.TRA 2SC4406-4-TL-E		T	54.9/37.7
Q10	1560000811	S.FET 2SK1069-4-TL-E		B	51.6/16.8
Q11	1530003221	S.TRA 2SC4406-4-TL-E		T	59.3/38.9
Q12	1530003221	S.TRA 2SC4406-4-TL-E		T	59.3/30
Q13	1590000720	S.TRA DTA144EUA T106	[USA-2]	T	111.8/27.4
	1590000720	S.TRA DTA144EUA T106	[USA-3]		
Q14	1510000691	S.TRA 2SA1734(TE12R,F)		T	38.8/50.8
Q15	1530002851	S.TRA 2SC4116-BL(TE85R,F)		T	34.9/47.8
Q16	1530003221	S.TRA 2SC4406-4-TL-E		B	102.3/35
Q17	1530000370	S.TRA 2SC3356-T1B		B	48.8/51.5
Q18	1560001101	S.FET 2SK3074(TE12L,F)		B	43.8/55.8
Q19	1580000660	S.FET 3SK272-(TX)		B	79.2/44.5
Q20	1560001061	S.FET 2SK3075(TE12L,Q)		T	36.6/67.7
Q21	1590001010	S.TRA DTB113ZK T146		T	26.3/32.4
Q22	1590000430	S.TRA DTC144EUA T106		T	27.3/29.3
Q23	1560001591	FET RD70HVF1C-121			
Q25	1590001010	S.TRA DTB113ZK T146		T	71.6/38.1
Q26	1590000720	S.TRA DTA144EUA T106		T	62.7/51.6
Q27	1580000660	S.FET 3SK272-(TX)		B	109.2/49.1
Q28	1530003910	S.TRA 2SC4684 (TE16L1 NQ)		B	17.3/53.7
Q29	1530003091	S.TRA 2SC4213-B(TE85R,F)		B	13.6/16.3
Q30	1510000890	S.TRA DTA143TU T106		B	24.1/42.9
Q31	1590001320	S.TRA DTC143ZUA T106		B	23.3/40.1
Q32	1530002851	S.TRA 2SC4116-BL(TE85R,F)		B	8.5/50.1
Q33	1520000460	S.TRA 2SB1132 T100 R		B	8.9/54.7
Q34	1530002851	S.TRA 2SC4116-BL(TE85R,F)		B	107/21.6
D1	1790001251	S.DIO MA2S1110GL		B	28/39.2
D2	1750000721	S.VAR HVC375BTRF-E		T	39.6/30.8
D3	1750000771	S.VAR HVC376BTRF-E		B	87/28.6
D4	1750000721	S.VAR HVC375BTRF-E		T	40.9/30.8
D5	1750000721	S.VAR HVC375BTRF-E		T	43.5/30.5
D6	1790000620	S.DIO MA77(TX)		B	62.6/47.5
D7	1790000620	S.DIO MA77(TX)		B	65.8/46.5
D9	1750000711	S.VAR HVC350BTRF-E		B	83.6/44.4
D10	1750000711	S.VAR HVC350BTRF-E		B	90.1/45.5
D11	1750000711	S.VAR HVC350BTRF-E		B	100/45.3
D12	1710001061	DIO L407CDB			
D13	1750000711	S.VAR HVC350BTRF-E		B	119.4/48.6
D14	1790000980	S.DIO MA742(TX)		T	95.1/72.6
D15	1750000550	S.DIO 1SS355 TE-17		T	119.5/58.1
D16	1710000871	S.DIO HVU131TRF-E		T	119.7/56.3
D17	1790000980	S.DIO MA742(TX)		T	97.6/74.3
D18	1790001251	S.DIO MA2S1110GL		B	71.2/53.1
D19	1710001081	DIO L308CCB			
D20	1730000521	ZEN RD20E-AZ B2	[TPE]		
	1730000520	ZEN RD20E B2	[USA]		
	1730000520	ZEN RD20E B2	[KOR]		
	1730000520	ZEN RD20E B2	[AUS]		
	1730000520	ZEN RD20E B2	[SEA]		
	1730000520	ZEN RD20E B2	[CSA]		
	1730000520	ZEN RD20E B2	[USA-1]		
	1730000521	ZEN RD20E-AZ B2	[KOR-1]		
	1730000520	ZEN RD20E B2	[THA-1]		
	1730000521	ZEN RD20E-AZ B2	[CSA-1]		
	1730000521	ZEN RD20E-AZ B2	[USA-2]		
	1730000520	ZEN RD20E B2	[USA-3]		
D21	1790000700	DIO DSA3A1			
D22	1790001521	S.ZEN MAZ8075GLL		B	11/49.6
D23	1790001251	S.DIO MA2S1110GL	[USA-2]	B	116.8/30.6
	1790001251	S.DIO MA2S1110GL	[USA-3]		
D24	1790001251	S.DIO MA2S1110GL	[USA-2]	B	112.2/24.3
	1790001251	S.DIO MA2S1110GL	[USA-3]		
D25	1790001251	S.DIO MA2S1110GL	[USA-2]	B	110/33.3
	1790001251	S.DIO MA2S1110GL	[USA-3]		
D26	1790001251	S.DIO MA2S1110GL	[USA-2]	B	114.1/33.3
	1790001251	S.DIO MA2S1110GL	[USA-3]		
D27	1710001061	DIO L407CDB			
D28	1790000980	S.DIO MA742(TX)		T	74.8/68.2
D29	1750000370	S.DIO DA221 TL		B	98.1/38.3
FI1	2020001520	CER CFWLA450KFFA-B0 (CFWS450F)			
FI2	2020001460	CER CFWLA450KHFA-B0 (CFWS450HT)	[USA-2]		
	2020001460	CER CFWLA450KHFA-B0 (CFWS450HT)	[USA-3]		
FI3	2010002420	MON 21R15AB (FL-310)			
FI4	2010002420	MON 21R15AB (FL-310)			
X1	6050010801	S.XTA CR-659A SX-2112 21.25 MHz		T	84/29.7
X2	6070000200	DIS CDBLA450KCAY24-B0 (CDB450C24)			
L1	6200004480	S.COI MLF1608D R82K-T		T	42.5/28.5

[MAIN UNIT]

REF NO.	PARTS NO.	DESCRIPTION		M.	H/V LOCATION
L2	6200002851	S.COI NLV25T-R82J		T	39.6/27.8
L3	6200001620	S.COI ELJFC 1R0K-F		T	66.9/25.6
L6	6200009920	S.COI C2012C-R10G-A		T	39.2/33
L7	6200009910	S.COI C6342A-88NG-A		T	48.4/31.1
L8	6200004870	S.COI ELJFC 2R7K-F		T	43.9/40.2
L9	6200004880	S.COI ELJFC 3R3K-F		T	49.5/36.4
L10	6200001620	S.COI ELJFC 1R0K-F		T	69.5/25.6
L11	6200006981	S.COI ELJRE R10GFA		T	56/35.2
L12	6200006981	S.COI ELJRE R10GFA		T	61.3/37.7
L13	6200006981	S.COI ELJRE R10GFA		T	61.3/32.5
L14	6200006991	S.COI ELJRE 56NGFA		B	62.2/40.4
L15	6200007001	S.COI ELJRE 82NGFA		T	61.3/27.3
L18	6200005741	S.COI ELJRE 47NGFA		B	55.6/51.4
L19	6200004920	S.COI MLF1608A 2R2K-T		B	106/35
L20	6200005741	S.COI ELJRE 47NGFA		B	71.9/45.8
L21	6200006981	S.COI ELJRE R10GFA		B	50.5/53.7
L22	6200006671	S.COI ELJRE 68NGFA		B	74.7/45.9
L23	6200005681	S.COI ELJRE 15NGFA		B	39.4/58.4
L24	6200003590	S.COI EXCCL3225U1		B	35/56.3
L25	6200003281	S.COI NLV25T-2R2J		B	79/41.3
L27	6200003590	S.COI EXCCL3225U1		T	30.5/74.1
L28	6200012460	S.COI 0.30-1.7-8TL 54N <COMO>		T	31.5/70
L30	6200012390	S.COI 0.30-0.92-3TR 5.8N <COMO>		T	34.2/75
L31	6200009930	S.COI C2012C-68NG-A		T	82/45.6
L32	6200009930	S.COI C2012C-68NG-A		T	94.5/45.3
L33	2040000490	COI EXC-ELDR25C			
L34	2040000490	COI EXC-ELDR25C			
L35	6110001680	COI LA-254			
L37	6200010040	S.COI AS100340-10N		T	82.5/66.1
L38	6200009920	S.COI C2012C-R10G-A		T	106.2/47.7
L39	6200010050	S.COI AS080547-47N		T	88/58.6
L40	6170000181	COI LW-19A	[TPE]		
	6170000180	COI LW-19	[USA]		
	6170000180	COI LW-19	[KOR]		
	6170000180	COI LW-19	[AUS]		
	6170000180	COI LW-19	[SEA]		
	6170000180	COI LW-19	[CSA]		
	6170000180	COI LW-19	[USA-1]		
	6170000181	COI LW-19A	[KOR-1]		
	6170000180	COI LW-19	[THA-1]		
	6170000181	COI LW-19A	[CSA-1]		
	6170000181	COI LW-19A	[USA-2]		
	6170000180	COI LW-19	[USA-3]		
L42	6200007370	S.COI ELJFC R82K-F		T	92.4/73.1
L43	6200012900	S.COI 0.30-2.0-7TL 57.2N <COMO>		T	118.4/48.9
L44	6200010050	S.COI AS080547-47N		T	104.7/69.8
L45	6200012760	S.COI 0.35-1.6-7TL 37.5N <COMO>		T	119.2/61.2
L46	6200010060	S.COI AS080647-56N		T	112.2/59.3
L47	6200010070	S.COI AS080747-68N		T	106.9/77
L48	6200010070	S.COI AS080747-68N		T	108.8/84
L50	6200002911	S.COI NLV25T-R27J		B	119/57.1
L51	6200010050	S.COI AS080547-47N		T	101/62.9
L53	6200005711	S.COI ELJRE 27NGFA		B	46/52.4
R1	7030003640	S.RES ERJ3GEYJ 473 V (47K)		T	37.7/28.1
R2	7030003560	S.RES ERJ3GEYJ 103 V (10K)		B	90.2/27.9
R3	7030003760	S.RES ERJ3GEYJ 474 V (470K)		B	90.2/25.3
R4	7030003300	S.RES ERJ3GEYJ 680 V (68)		T	38.3/30.7
R5	7030003520	S.RES ERJ3GEYJ 472 V (4.7K)		B	28/40.5
R6	7030003420	S.RES ERJ3GEYJ 681 V (680)		B	47.8/25.8
R7	7510001470	S.THE NTCG20 4AG 473JT		T	85.5/13.7
R8	7030003680	S.RES ERJ3GEYJ 104 V (100K)		T	84.4/17.3
R9	7030003560	S.RES ERJ3GEYJ 103 V (10K)		B	73.2/12.9
R10	7030003640	S.RES ERJ3GEYJ 473 V (47K)		B	88.9/27.9
R11	7030003560	S.RES ERJ3GEYJ 103 V (10K)		B	74.7/12.9
R12	7030003320	S.RES ERJ3GEYJ 101 V (100)		B	50.4/25.8
R13	7030003490	S.RES ERJ3GEYJ 272 V (2.7K)		B	52.3/27.7
R14	7030003800	S.RES ERJ3GEYJ 105 V (1M)		B	56.3/27.3
R15	7030003730	S.RES ERJ3GEYJ 274 V (270K)		B	57.6/27.3
R16	7030003600	S.RES ERJ3GEYJ 223 V (22K)		B	28.5/30.8
R17	7030003720	S.RES ERJ3GEYJ 224 V (220K)		B	82.1/28.9
R18	7030003440	S.RES ERJ3GEYJ 102 V (1K)		B	48.9/20.5
R19	7030003550	S.RES ERJ3GEYJ 822 V (8.2K)		T	38.9/35.9
R20	7030003530	S.RES ERJ3GEYJ 562 V (5.6K)		T	47.2/34.5
R21	7030003380	S.RES ERJ3GEYJ 331 V (330)		B	49.7/22.4
R22	7030003440	S.RES ERJ3GEYJ 102 V (1K)		B	32.5/38.6
R23	7030003600	S.RES ERJ3GEYJ 223 V (22K)		T	39.6/37.8
R24	7030003480	S.RES ERJ3GEYJ 222 V (2.2K)		B	78.3/25.2
R25	7030003560	S.RES ERJ3GEYJ 103 V (10K)		T	44.6/34.5
R26	7030003560	S.RES ERJ3GEYJ 103 V (10K)		B	78.3/29.2
R27	7030003470	S.RES ERJ3GEYJ 182 V (1.8K)		T	38.9/39.7
R28	7030003440	S.RES ERJ3GEYJ 102 V (1K)		T	46.3/41.4
R29	7030003560	S.RES ERJ3GEYJ 103 V (10K)		B	50.8/19
R30	7030003490	S.RES ERJ3GEYJ 272 V (2.7K)		T	43/32.4
R31	7030003440	S.RES ERJ3GEYJ 102 V (1K)		T	51.4/36.1
R32	7030003200	S.RES ERJ3GEYJ 100 V (10)		T	49.2/41.4
R33	7030003200	S.RES ERJ3GEYJ 100 V (10)		T	53.2/39.6
R34	7030003680	S.RES ERJ3GEYJ 104 V (100K)		T	54.7/35.2
R35	7030003380	S.RES ERJ3GEYJ 331 V (330)		T	56.8/33.3
R36	7030003440	S.RES ERJ3GEYJ 102 V (1K)		B	54.6/19
R37	7030003640	S.RES ERJ3GEYJ 473 V (47K)		B	54.6/15.9
R39	7030003640	S.RES ERJ3GEYJ 473 V (47K)		T	58.7/36.4
R40	7030003680	S.RES ERJ3GEYJ 104 V (100K)		T	59.4/31.9
R41	7030003280	S.RES ERJ3GEYJ 470 V (47)		T	57.4/36.1
R42	7030003400	S.RES ERJ3GEYJ 471 V (470)		T	59.4/33.2
R43	7030003550	S.RES ERJ3GEYJ 822 V (8.2K)		B	66.2/34.8
R44	7030003320	S.RES ERJ3GEYJ 101 V (100)		B	68.1/24.4
R45	7030003680	S.RES ERJ3GEYJ 104 V (100K)		T	34.8/45.4
R46	7030003420	S.RES ERJ3GEYJ 681 V (680)		B	66.9/32.9
R47	7030003480	S.RES ERJ3GEYJ 222 V (2.2K)		T	35.6/50.7
R48	7030003480	S.RES ERJ3GEYJ 222 V (2.2K)		T	34.3/50.7
R49	7030003520	S.RES ERJ3GEYJ 472 V (4.7K)		B	62.9/45.8
R50	7030003520	S.RES ERJ3GEYJ 472 V (4.7K)		B	60.5/49.6

M.=Mounted side (T: Mounted on the Top side, B: Mounted on the Bottom side)
S.=Surface mount

[MAIN UNIT]

REF NO.	PARTS NO.	DESCRIPTION	M.	H/V LOCATION
R51	7030003520	S.RES ERJ3GEYJ 472 V (4.7K)	B	68/45.8
R52	7030003460	S.RES ERJ3GEYJ 152 V (1.5K)	T	107.8/29.3
R54	7030003220	S.RES ERJ3GEYJ 150 V (15)	B	53.7/51.3
R55	7030003640	S.RES ERJ3GEYJ 473 V (47K)	T	107.8/26.5
R56	7030003400	S.RES ERJ3GEYJ 471 V (470)	B	97.7/32.8
R57	7030003620	S.RES ERJ3GEYJ 333 V (33K)	B	51.1/51.3
R58	7030003670	S.RES ERJ3GEYJ 823 V (82K)	B	99.6/33.6
R59	7030003480	S.RES ERJ3GEYJ 222 V (2.2K)	T	103.7/26.5
R60	7030003260	S.RES ERJ3GEYJ 330 V (33)	B	53.1/53.7
R62	7030003440	S.RES ERJ3GEYJ 102 V (1K)	B	98.3/36.6
R63	7030003360	S.RES ERJ3GEYJ 221 V (220)	B	97/31.2
R64	7030003680	S.RES ERJ3GEYJ 104 V (100K)	T	103.7/23.7
R66	7030003680	S.RES ERJ3GEYJ 104 V (100K)	B	101.7/28.1
R67	7030003290	S.RES ERJ3GEYJ 560 V (56)	B	47.9/55
R68	7030003720	S.RES ERJ3GEYJ 224 V (220K)	B	50.5/55
R69	7030003620	S.RES ERJ3GEYJ 333 V (33K)	B	50.5/56.3
R71	7030003400	S.RES ERJ3GEYJ 471 V (470)	B	104.6/20.2
R72	7030003370	S.RES ERJ3GEYJ 271 V (270)	B	81.4/39.7
R73	7030003470	S.RES ERJ3GEYJ 182 V (1.8K) [TPE]	B	97.4/27.4
	7030003470	S.RES ERJ3GEYJ 182 V (1.8K) [USA]		
	7030003470	S.RES ERJ3GEYJ 182 V (1.8K) [KOR]		
	7030003470	S.RES ERJ3GEYJ 182 V (1.8K) [AUS]		
	7030003470	S.RES ERJ3GEYJ 182 V (1.8K) [SEA]		
	7030003470	S.RES ERJ3GEYJ 182 V (1.8K) [CSA]		
	7030003470	S.RES ERJ3GEYJ 182 V (1.8K) [USA-1]		
	7030003470	S.RES ERJ3GEYJ 182 V (1.8K) [KOR-1]		
	7030003470	S.RES ERJ3GEYJ 182 V (1.8K) [THA-1]		
	7030003470	S.RES ERJ3GEYJ 182 V (1.8K) [CSA-1]		
	7030003510	S.RES ERJ3GEYJ 392 V (3.9K) [USA-2]		
	7030003510	S.RES ERJ3GEYJ 392 V (3.9K) [USA-3]		
R76	7030003320	S.RES ERJ3GEYJ 101 V (100)	B	76.3/37.2
R78	7030003440	S.RES ERJ3GEYJ 102 V (1K)	B	79/39.4
R79	7030003360	S.RES ERJ3GEYJ 221 V (220)	B	75.7/40.8
R81	7030003560	S.RES ERJ3GEYJ 103 V (10K)	B	76/45.9
R82	7030003290	S.RES ERJ3GEYJ 560 V (56)	T	42.3/60.3
R83	7030003620	S.RES ERJ3GEYJ 333 V (33K)	T	42.8/58.3
R84	7030003560	S.RES ERJ3GEYJ 103 V (10K)	T	44.1/58.3
R88	7030003400	S.RES ERJ3GEYJ 471 V (470)	T	90.7/24.7
R90	7030003720	S.RES ERJ3GEYJ 224 V (220K)	B	85.5/45.1
R92	7030003620	S.RES ERJ3GEYJ 333 V (33K)	T	27.8/68.6
R93	7030003720	S.RES ERJ3GEYJ 224 V (220K)	B	92.1/45.1
R95	7030000230	S.RES MCR10EZHJ 56 (560)	T	31.9/78.1
R96	7030000660	S.RES MCR10EZHJ 220 K (224)	T	26.8/73.9
R98	7030009980	S.RES ERJ12RSJR15U	T	37/83.3
R101	7030003720	S.RES ERJ3GEYJ 224 V (220K)	B	98.7/46.4
R103	7030003680	S.RES ERJ3GEYJ 104 V (100K)	B	59.3/54.6
R104	7030003740	S.RES ERJ3GEYJ 334 V (330K)	B	60.6/57.2
R105	7030003680	S.RES ERJ3GEYJ 104 V (100K)	B	101.3/47.9
R106	7030003560	S.RES ERJ3GEYJ 103 V (10K)	T	65.7/55.3
R107	7030003710	S.RES ERJ3GEYJ 184 V (180K)	T	62.7/57.1
R108	7030003480	S.RES ERJ3GEYJ 222 V (2.2K)	T	65.7/56.6
R109	7030003510	S.RES ERJ3GEYJ 392 V (3.9K)	T	62.7/54.5
R110	7030003440	S.RES ERJ3GEYJ 102 V (1K)	B	106.5/47.8
R111	7030003320	S.RES ERJ3GEYJ 101 V (100)	B	107.1/51.6
R112	7030003620	S.RES ERJ3GEYJ 333 V (33K)	B	12.7/13.7
R113	7030003680	S.RES ERJ3GEYJ 104 V (100K)	B	110.2/46.3
R114	7030003640	S.RES ERJ3GEYJ 473 V (47K)	B	114.1/46.3
R117	7030003560	S.RES ERJ3GEYJ 103 V (10K)	B	112.3/48.2
R118	7030003560	S.RES ERJ3GEYJ 103 V (10K)	B	11.4/16.3
R119	7030003720	S.RES ERJ3GEYJ 224 V (220K)	B	117.5/46.7
R120	7030003440	S.RES ERJ3GEYJ 102 V (1K)	B	17.3/46.6
R121	7030001010	S.RES MCR50JZHJ 10 (100)	B	22.5/45.7
R122	7030003640	S.RES ERJ3GEYJ 473 V (47K)	B	15.7/17
R123	7030003540	S.RES ERJ3GEYJ 682 V (6.8K)	B	118/54.7
R124	7030003550	S.RES ERJ3GEYJ 822 V (8.2K)	T	94.8/74.7
R125	7030000100	S.RES MCR10EZHJ 4.7 (4R7)	T	2.1/82.8
R126	7030003550	S.RES ERJ3GEYJ 822 V (8.2K)	T	94.8/76
R127	7030003690	S.RES ERJ3GEYJ 124 V (120K)	B	71.2/55.7
R128	7030003680	S.RES ERJ3GEYJ 104 V (100K)	B	67/52.4
R129	7030003680	S.RES ERJ3GEYJ 104 V (100K)	B	69.9/55.7
R130	7030003610	S.RES ERJ3GEYJ 273 V (27K)	B	71.9/57.7
R131	7030003670	S.RES ERJ3GEYJ 823 V (82K)	B	108.6/88
R132	7030003640	S.RES ERJ3GEYJ 473 V (47K)	B	59.5/13.2
R133	7030003440	S.RES ERJ3GEYJ 102 V (1K)	B	8.5/48.2
R134	7030003680	S.RES ERJ3GEYJ 104 V (100K)	B	8.4/58
R135	7030003570	S.RES ERJ3GEYJ 123 V (12K) [USA-2]	B	113.3/35.2
	7030003570	S.RES ERJ3GEYJ 123 V (12K) [USA-3]		
R136	7030003570	S.RES ERJ3GEYJ 123 V (12K) [USA-2]	B	110.7/35.2
	7030003570	S.RES ERJ3GEYJ 123 V (12K) [USA-3]		
R137	7030003570	S.RES ERJ3GEYJ 123 V (12K) [USA-2]	B	118.9/29.9
	7030003570	S.RES ERJ3GEYJ 123 V (12K) [USA-3]		
R138	7030003570	S.RES ERJ3GEYJ 123 V (12K) [USA-2]	B	112.5/21.6
	7030003570	S.RES ERJ3GEYJ 123 V (12K) [USA-3]		
R139	7030003580	S.RES ERJ3GEYJ 153 V (15K) [USA-2]	B	118.9/31.4
	7030003580	S.RES ERJ3GEYJ 153 V (15K) [USA-3]		
R140	7030003580	S.RES ERJ3GEYJ 153 V (15K) [USA-2]	B	108.7/33.3
	7030003580	S.RES ERJ3GEYJ 153 V (15K) [USA-3]		
R150	7030006070	S.RES ERJ12YJ101U (100)	T	70.3/54.5
R151	7030009980	S.RES ERJ12RSJR15U	T	29.2/79.3
R152	7030003270	S.RES ERJ3GEYJ 390 V (39)	B	58.2/48.8
R153	7030003340	S.RES ERJ3GEYJ 151 V (150)	B	59.7/46.2
R154	7030003340	S.RES ERJ3GEYJ 151 V (150)	B	56.7/47.5
R155	7030003490	S.RES ERJ3GEYJ 272 V (2.7K) [USA-2]	B	105.8/23.7
	7030003490	S.RES ERJ3GEYJ 272 V (2.7K) [USA-3]		
R156	7030003640	S.RES ERJ3GEYJ 473 V (47K) [USA-2]	B	108.5/18.9
	7030003640	S.RES ERJ3GEYJ 473 V (47K) [USA-3]		
R157	7030003640	S.RES ERJ3GEYJ 473 V (47K) [USA-2]	B	110.6/20.9
	7030003640	S.RES ERJ3GEYJ 473 V (47K) [USA-3]		
R161	7030003620	S.RES ERJ3GEYJ 333 V (33K)	B	62.7/11.2
R162	7030003610	S.RES ERJ3GEYJ 273 V (27K)	B	61.4/12.5
R163	7030000230	S.RES MCR10EZHJ 56 (560)	T	33.2/81.5
R164	7030000230	S.RES MCR10EZHJ 56 (560)	T	32.4/84.2
R165	7030003680	S.RES ERJ3GEYJ 104 V (100K)	T	73.4/73.9
R166	7030003560	S.RES ERJ3GEYJ 103 V (10K)	T	74.3/65.6

[MAIN UNIT]

REF NO.	PARTS NO.	DESCRIPTION	M.	H/V LOCATION
R167	7030003680	S.RES ERJ3GEYJ 104 V (100K)	T	71.7/65.6
R168	7030003340	S.RES ERJ3GEYJ 151 V (150)	B	69.3/45.8
R169	7030003270	S.RES ERJ3GEYJ 390 V (39)	B	70.6/45.8
R170	7030003340	S.RES ERJ3GEYJ 151 V (150)	B	70.6/43.2
R171	7030003440	S.RES ERJ3GEYJ 102 V (1K) [USA-2]	T	111.9/14.9
	7030003440	S.RES ERJ3GEYJ 102 V (1K) [USA-3]		
R172	7030003680	S.RES ERJ3GEYJ 104 V (100K) [USA-2]	T	111.2/30.8
	7030003680	S.RES ERJ3GEYJ 104 V (100K) [USA-3]		
R173	7030003560	S.RES ERJ3GEYJ 103 V (10K)	T	92.5/12.8
R174	7030003320	S.RES ERJ3GEYJ 101 V (100)	T	101.9/46.6
R175	7030003640	S.RES ERJ3GEYJ 473 V (47K)	T	52.6/13.9
R176	7030003440	S.RES ERJ3GEYJ 102 V (1K)	T	10.1/82.2
W1	7030003860	S.RES ERJ3GE JPW V [TPE]	B	115.5/30.6
	7030003860	S.RES ERJ3GE JPW V [USA]		
	7030003860	S.RES ERJ3GE JPW V [KOR]		
	7030003860	S.RES ERJ3GE JPW V [AUS]		
	7030003860	S.RES ERJ3GE JPW V [SEA]		
	7030003860	S.RES ERJ3GE JPW V [CSA]		
	7030003860	S.RES ERJ3GE JPW V [USA-1]		
	7030003860	S.RES ERJ3GE JPW V [KOR-1]		
	7030003860	S.RES ERJ3GE JPW V [THA-1]		
	7030003860	S.RES ERJ3GE JPW V [CSA-1]		
W2	7030003860	S.RES ERJ3GE JPW V [TPE]	B	110.9/24.3
	7030003860	S.RES ERJ3GE JPW V [USA]		
	7030003860	S.RES ERJ3GE JPW V [KOR]		
	7030003860	S.RES ERJ3GE JPW V [AUS]		
	7030003860	S.RES ERJ3GE JPW V [SEA]		
	7030003860	S.RES ERJ3GE JPW V [CSA]		
	7030003860	S.RES ERJ3GE JPW V [USA-1]		
	7030003860	S.RES ERJ3GE JPW V [KOR-1]		
	7030003860	S.RES ERJ3GE JPW V [THA-1]		
	7030003860	S.RES ERJ3GE JPW V [CSA-1]		
W3	7030003860	S.RES ERJ3GE JPW V	B	101.5/32.8
C1	4550007550	S.TAN F931V334MAABMA	B	48.8/27.5
C2	4030006860	S.CER C1608 JB 1H 102K-T	T	27.4/26.4
C3	4510008550	S.ELE EEE1HA010SR	T	93.3/27.9
C4	4030011600	S.CER C1608 JB 1E 104K-T	T	84.4/16
C5	4030006900	S.CER C1608 JB 1H 103K-T	T	43.5/26
C7	4030006860	S.CER C1608 JB 1H 102K-T	T	37/30.7
C8	4030006860	S.CER C1608 JB 1H 102K-T	B	88.2/26
C9	4030006860	S.CER C1608 JB 1H 102K-T	T	44.1/28.2
C10	4510008520	S.ELE EEE1CA470SP	T	30.2/39.8
C11	4550006250	S.TAN TEESVA 1A 106M8R	B	48.4/24.1
C12	4550006760	S.TAN TEESVB21A336M8R	B	53.9/23.8
C13	4030007110	S.CER C1608 CH 1H 680J-T	B	88.9/30.5
C14	4030006860	S.CER C1608 JB 1H 102K-T	B	30.3/37.4
C15	4030006860	S.CER C1608 JB 1H 102K-T	T	68.3/22.8
C16	4030006990	S.CER C1608 CH 1H 080D-T	B	86.1/31.2
C17	4030006860	S.CER C1608 JB 1H 102K-T	B	29.8/30.8
C20	4030007090	S.CER C1608 CH 1H 470J-T	T	40.8/35.2
C21	4030007090	S.CER C1608 CH 1H 470J-T	T	44.3/32.4
C22	4030007040	S.CER C1608 CH 1H 180J-T	B	80.3/27.1
C23	4030007070	S.CER C1608 CH 1H 330J-T	B	79.6/25.2
C24	4550007400	S.TAN F931A225MAABMA	B	52.1/20.7
C25	4030006980	S.CER C1608 CH 1H 070D-T	T	41.5/38
C26	4030007010	S.CER C1608 CH 1H 100D-T	T	47.6/36.4
C28	4030006860	S.CER C1608 JB 1H 102K-T	B	37.4/39.8
C29	4030006980	S.CER C1608 CH 1H 070D-T	T	46.3/38.8
C30	4030006950	S.CER C1608 CH 1H 040C-T	B	75.9/29.3
C31	4030006860	S.CER C1608 JB 1H 102K-T	B	40.8/32.9
C32	4030007020	S.CER C1608 CH 1H 120J-T	T	52/38
C34	4030009500	S.CER C1608 CH 1H 0R5B-T	T	46.3/40.1
C36	4030006860	S.CER C1608 JB 1H 102K-T	T	38.2/37.8
C37	4030009500	S.CER C1608 CH 1H 0R5B-T	T	50.6/39.6
C38	4030006860	S.CER C1608 JB 1H 102K-T	T	42.7/35.2
C39	4030011600	S.CER C1608 JB 1E 104K-T	B	73.8/27.6
C41	4030006860	S.CER C1608 JB 1H 102K-T	B	66/5.3
C42	4030006860	S.CER C1608 JB 1H 102K-T	B	100/5.1
C44	4030006860	S.CER C1608 JB 1H 102K-T	T	56.8/32
C45	4030006860	S.CER C1608 JB 1H 102K-T	B	63.1/27.3
C47	4030011600	S.CER C1608 JB 1E 104K-T	B	63.1/29.9
C48	4030006860	S.CER C1608 JB 1H 102K-T	T	54.9/32.5
C49	4030007010	S.CER C1608 CH 1H 100D-T	T	56.5/39.6
C50	4030006940	S.CER C1608 CH 1H 030C-T	T	56.5/30.7
C51	4030006860	S.CER C1608 JB 1H 102K-T	B	54.6/17.7
C52	4030006860	S.CER C1608 JB 1H 102K-T	B	54.6/14.6
C53	4030006860	S.CER C1608 JB 1H 102K-T	B	65.4/32.9
C54	4030007050	S.CER C1608 CH 1H 220J-T	T	61.3/40.3
C55	4030007050	S.CER C1608 CH 1H 220J-T	T	61.3/29.9
C56	4030006860	S.CER C1608 JB 1H 102K-T	T	60/36.4
C57	4030006860	S.CER C1608 JB 1H 102K-T	T	61.3/35.1
C58	4030006860	S.CER C1608 JB 1H 102K-T	T	59.4/34.5
C59	4030006860	S.CER C1608 JB 1H 102K-T	T	37.4/45.4
C60	4030006860	S.CER C1608 JB 1H 102K-T	B	70.7/24.4
C61	4030007050	S.CER C1608 CH 1H 220J-T	B	60.3/39.6
C62	4030007020	S.CER C1608 CH 1H 120J-T	T	59.4/26.5
C63	4030006860	S.CER C1608 JB 1H 102K-T	T	36.8/47.3
C64	4030011600	S.CER C1608 JB 1E 104K-T	T	32.6/47.6
C65	4030007050	S.CER C1608 CH 1H 220J-T	B	64.1/39.6
C66	4030007050	S.CER C1608 CH 1H 220J-T	B	68.2/32.9
C67	4030006860	S.CER C1608 JB 1H 102K-T	B	65.3/42.4
C68	4030007000	S.CER C1608 CH 1H 090D-T	T	59.4/28
C69	4510008540	S.ELE EEE1CA100SR	T	70.3/59.1
C70	4030006860	S.CER C1608 JB 1H 102K-T	B	68/42.7
C71	4030007090	S.CER C1608 CH 1H 470J-T	B	69.7/32.9
C72	4030006860	S.CER C1608 JB 1H 102K-T	B	61.8/49.6
C73	4030007050	S.CER C1608 CH 1H 220J-T	B	72.3/32.9
C74	4030006860	S.CER C1608 JB 1H 102K-T	B	57.4/50.7
C75	4030006860	S.CER C1608 JB 1H 102K-T	B	74.2/34.8
C77	4030006900	S.CER C1608 JB 1H 103K-T	B	106.4/33

M.=Mounted side (T: Mounted on the Top side, B: Mounted on the Bottom side)
S.=Surface mount

[MAIN UNIT]

REF NO.	PARTS NO.	DESCRIPTION	M.	H/V LOCATION
C78	4030011600	S.CER C1608 JB 1E 104K-T	B	108.7/24
C79	4030007080	S.CER C1608 CH 1H 390J-T	B	71.9/43.2
C80	4030007050	S.CER C1608 CH 1H 220J-T	B	104.5/33.7
C81	4030006900	S.CER C1608 JB 1H 103K-T	T	111.2/29.4
C82	4510008540	S.ELE EEE1CA100SR	T	103.9/32.9
C83	4030012600	S.CER C2012 JB 1A 105M-T	T	100.6/32.9
C84	4030007170	S.CER C1608 CH 1H 221J-T	T	105.7/25.7
C85	4030007170	S.CER C1608 CH 1H 221J-T	T	105.7/27.2
C86	4030006860	S.CER C1608 JB 1H 102K-T	T	106.5/29.7
C87	4030007100	S.CER C1608 CH 1H 560J-T	B	73.4/48.4
C88	4030007100	S.CER C1608 CH 1H 560J-T	B	73.4/45.8
C89	4030006900	S.CER C1608 JB 1H 103K-T	B	95/30.5
C90	4030006860	S.CER C1608 JB 1H 102K-T	B	47.9/53.7
C91	4030006860	S.CER C1608 JB 1H 102K-T	B	52.4/51.3
C93	4030006910	S.CER C1608 CH 1H 0R5C-T	B	97.5/34.8
C94	4030006860	S.CER C1608 JB 1H 102K-T	B	102.4/30.1
C95	4030006860	S.CER C1608 JB 1H 102K-T	B	95.4/28.1
C96	4030006860	S.CER C1608 JB 1H 102K-T	B	47.9/56.3
C97	4030006960	S.CER C1608 CH 1H 050C-T	B	89.5/34.6
C98	4030008900	S.CER C1608 JB 1H 333K-T	B	106.5/18.6
C100	4030007120	S.CER C1608 CH 1H 820J-T	B	102.4/25.8
C101	4030006860	S.CER C1608 JB 1H 102K-T	B	103.8/22.3
C102	4030006860	S.CER C1608 JB 1H 102K-T	B	54.1/56.2
C104	4510008500	S.ELE EEE1CA101WP	T	32/56.7
C105	4030006860	S.CER C1608 JB 1H 102K-T	B	103.8/18
C106	4030006860	S.CER C1608 JB 1H 102K-T	B	37.8/54.6
C108	4030006860	S.CER C1608 JB 1H 102K-T	B	77.1/39
C109	4030006900	S.CER C1608 JB 1H 103K-T	B	37.1/59
C111	4030009990	S.CER C1608 CH 1H 200J-T	B	79/38.1
C112	4030007100	S.CER C1608 CH 1H 560J-T	T	40.4/59.6
C113	4030006860	S.CER C1608 JB 1H 102K-T	B	75.1/42.7
C116	4030006860	S.CER C1608 JB 1H 102K-T	T	44.9/60.3
C117	4030006900	S.CER C1608 JB 1H 103K-T	T	68.6/37.1
C118	4510008520	S.ELE EEE1CA470SP	T	22/78.5
C120	4030006900	S.CER C1608 JB 1H 103K-T	T	89.2/26
C122	4030006860	S.CER C1608 JB 1H 102K-T	T	26.7/77.4
C123	4030006860	S.CER C1608 JB 1H 102K-T	T	30.4/65.2
C124	4030006960	S.CER C1608 CH 1H 050C-T	B	80.9/48.5
C125	4510008540	S.ELE EEE1CA100SR	T	50.2/58.4
C126	4030006860	S.CER C1608 JB 1H 102K-T	T	30.4/67.1
C127	4030006950	S.CER C1608 CH 1H 040C-T	B	85/47
C128	4030006860	S.CER C1608 JB 1H 102K-T	B	88.1/45.1
C129	4030006900	S.CER C1608 JB 1H 103K-T	T	29.1/67.1
C130	4030007060	S.CER C1608 CH 1H 270J-T	T	36.6/74.2
C131	4030007080	S.CER C1608 CH 1H 390J-T	B	83.7/47
C133	4030006920	S.CER C1608 CH 1H 010C-T	B	89.5/47.8
C134	4030006860	S.CER C1608 JB 1H 102K-T	B	102.7/19.4
C135	4030004990	S.CER C2012 CH 1H 101J-T	T	34.2/78
C136	4030006930	S.CER C1608 CH 1H 020C-T	B	86.9/47.8
C137	4030006860	S.CER C1608 JB 1H 102K-T	T	27.6/75.5
C138	4030006860	S.CER C1608 JB 1H 102K-T	B	94.7/45.1
C139	4030007080	S.CER C1608 CH 1H 390J-T	B	91.4/47
C140	4030006900	S.CER C1608 JB 1H 103K-T	B	68.9/53.4
C141	4030006960	S.CER C1608 CH 1H 050C-T	B	92.7/47
C142	4030006860	S.CER C1608 JB 1H 102K-T	B	35.3/88.5
C145	4030006920	S.CER C1608 CH 1H 010C-T	B	95.5/48.6
C146	4030006860	S.CER C1608 JB 1H 102K-T	B	97.4/46.4
C147	4510008500	S.ELE EEE1CA101WP	T	67.5/91.2
C148	4030008560	S.CER C1608 CH 1H 300J-T	B	100/47.9
C149	4030011600	S.CER C1608 JB 1E 104K-T	B	59.3/57.2
C150	4030006860	S.CER C1608 JB 1H 102K-T	T	72.6/88.3
C151	4030017880	S.CER ERF22X 6C2H 560J D01L (GRM111)	T	69.1/71.5
C152	4030006930	S.CER C1608 CH 1H 020C-T	B	98.1/48.6
C153	4030011600	S.CER C1608 JB 1E 104K-T	B	60.6/54.6
C154	4030006860	S.CER C1608 JB 1H 102K-T	B	28/35.4
C155	4030006900	S.CER C1608 JB 1H 103K-T	T	72.6/89.6
C156	4030017890	S.CER ERF22X 6C2H 101J D01L (GRM111)	T	82.7/83.9
C157	4550007510	S.TAN F931C106MBABMA	T	23.3/43.1
C158	4030006860	S.CER C1608 JB 1H 102K-T	B	103.2/48.6
C159	4030017880	S.CER ERF22X 6C2H 560J D01L (GRM111)	T	63.2/82.5
C160	4030006860	S.CER C1608 JB 1H 102K-T	B	103.2/47
C161	4030006860	S.CER C1608 JB 1H 102K-T	T	72.8/40.5
C163	4030006860	S.CER C1608 JB 1H 102K-T	T	65.7/54
C164	4030006860	S.CER C1608 JB 1H 102K-T	B	105.8/51.6
C166	4510008500	S.ELE EEE1CA101WP	T	16.8/46.3
C167	4030011730	S.CER GRM31M2C2H101JV01L (GRM42-6 CH)	T	83.4/60.9
C168	4030006860	S.CER C1608 JB 1H 102K-T	B	14/46.5
C169	4030006860	S.CER C1608 JB 1H 102K-T	T	62.1/48.8
C170	4030006860	S.CER C1608 JB 1H 102K-T	B	112.8/46.3
C171	4030011160	S.CER GRM31M2C2H150JV01L (GRM42-6 CH)	T	87.1/62.3
C172	4030006860	S.CER C1608 JB 1H 102K-T	B	14/47.8
C173	4030006860	S.CER C1608 JB 1H 102K-T	T	23.9/32.6
C174	4030006860	S.CER C1608 JB 1H 102K-T	T	74/56.7
C175	4510008810	S.ELE EEE1CA331UP	T	17.6/36.6
C176	4030011190	S.CER GRM31M2C2H270JV01L (GRM42-6 CH)	T	92.5/58.5
C177	4510008540	S.ELE EEE1CA100SR	T	24.1/49.2
C178	4030006960	S.CER C1608 CH 1H 050C-T	B	112/49.8
C179	4030006860	S.CER C1608 JB 1H 102K-T	B	17.3/45.3
C180	4030006860	S.CER C1608 JB 1H 102K-T	B	119.4/45.9
C181	4510008550	S.ELE EEE1HA010SR	T	18/15.3
C182	4030007080	S.CER C1608 CH 1H 390J-T	B	117.5/49.3
C183	4030006920	S.CER C1608 CH 1H 010C-T	B	119.5/50
C184	4030006960	S.CER C1608 CH 1H 050C-T	B	118.8/51.9
C185	4030006860	S.CER C1608 JB 1H 102K-T	B	15.7/19.6
C187	4030006860	S.CER C1608 JB 1H 102K-T	B	117.2/52.8
C188	4510008550	S.ELE EEE1HA010SR	T	13.2/15.4
C189	4030006860	S.CER C1608 JB 1H 102K-T	B	18.1/60.6

[MAIN UNIT]

REF NO.	PARTS NO.	DESCRIPTION	M.	H/V LOCATION
C190	4030011020	S.CER GRM31M4C2H1R0CY21L (GRM42-6 CK)	T	98.7/71.4
C191	4030007020	S.CER C1608 CH 1H 120J-T	T	94.9/70.5
C192	4030008880	S.CER C1608 JB 1H 223K-T	T	13.6/21.4
C193	4030006860	S.CER C1608 JB 1H 102K-T	B	73.1/52.3
C194	4510008810	S.ELE EEE1CA331UP	T	8.8/35.3
C195	4030008960	S.CER C2012 JB 1C 104K-T	T	5.4/82.8
C196	4030011020	S.CER GRM31M4C2H1R0CY21L (GRM42-6 CK)	T	101.6/74.1
C197	4030007020	S.CER C1608 CH 1H 120J-T	T	96.7/76.7
C198	4030006860	S.CER C1608 JB 1H 102K-T	T	92.8/76.1
C200	4030006860	S.CER C1608 JB 1H 102K-T	T	26.7/82.4
C201	4030007040	S.CER C1608 CH 1H 180J-T	T	117.1/61.8
C203	4030017980	S.CER ERF22X 6C2H 470J D01L	T	101.8/76.8
C204	4510008870	S.ELE EEE1AA471UP	T	4.7/76.5
C205	4030006860	S.CER C1608 JB 1H 102K-T	T	23.2/83.7
C206	4030011050	S.CER GRM31M3C2H3R0CY21L (GRM42-6 CJ)	T	101/57.6
C207	4510006021	ELE 16 ME 2200 HC		
C208	4030011210	S.CER GRM31M2C2H330JV01L (GRM42-6 CH)	T	102.2/82.5
C209	4030011600	S.CER C1608 JB 1E 104K-T	B	69.9/58.4
C210	4030011160	S.CER GRM31M2C2H150JV01L (GRM42-6 CH)	T	107.6/88
C211	4030006860	S.CER C1608 JB 1H 102K-T	B	73.9/58.4
C212	4030006860	S.CER C1608 JB 1H 102K-T	B	8.5/46.9
C213	4030006860	S.CER C1608 JB 1H 102K-T	B	12.6/49.8
C214	4510008520	S.ELE EEE1CA470SP	T	16.8/54.7
C215	4030011600	S.CER C1608 JB 1E 104K-T	B	7.5/59.3
C216	4030011600	S.CER C1608 JB 1E 104K-T	B	112.2/27.2
C217	4030011240	S.CER GRM31M2C2H470JV01L (GRM42-6 CH)	T	98.7/69.3
C218	4030011180	S.CER GRM31M2C2H220JV01L (GRM42-6 CH)	T	97.1/61.1
C219	4030007000	S.CER C1608 CH 1H 090D-T	B	119.3/60.2
C222	4030006900	S.CER C1608 JB 1H 103K-T	B	108.4/51.6
C224	4030011600	S.CER C1608 JB 1E 104K-T	B	113.4/31.4
C225	4030017200	S.CER GRM31BR32J102KY01L (GHM1030 R)	T	106.8/59.2
C227	4030011730	S.CER GRM31M2C2H101JV01L (GRM42-6 CH)	T	81.2/60.9
C228	4030011230	S.CER GRM31M2C2H390JV01L (GRM42-6 CH)	T	85.2/76
C229	4030011230	S.CER GRM31M2C2H390JV01L (GRM42-6 CH)	T	85.2/69.8
C230	4510008540	S.ELE EEE1CA100SR [USA-2]	T	109.6/18.4
	4510008540	S.ELE EEE1CA100SR [USA-3]		
C232	4030006860	S.CER C1608 JB 1H 102K-T [USA-2]	B	104.3/25
	4030006860	S.CER C1608 JB 1H 102K-T [USA-3]		
C233	4030011600	S.CER C1608 JB 1E 104K-T [USA-2]	B	109.8/18.9
	4030011600	S.CER C1608 JB 1E 104K-T [USA-3]		
C234	4030007160	S.CER C1608 CH 1H 181J-T	T	36.3/79
C235	4030010760	S.CER C1608 CH 1H 331J-T	T	40.1/80.8
C237	4030006930	S.CER C1608 CH 1H 020C-T	T	77.6/67.7
C238	4030006860	S.CER C1608 JB 1H 102K-T	T	72/67.5
C239	4030011600	S.CER C1608 JB 1E 104K-T	T	73/65.6
C240	4030006860	S.CER C1608 JB 1H 102K-T	B	68.5/47.6
C241	4030011600	S.CER C1608 JB 1E 104K-T	B	83.4/28.9
C242	4030006860	S.CER C1608 JB 1H 102K-T	B	59.7/47.5
C243	4030006970	S.CER C1608 CH 1H 060D-T	B	81.4/36.9
C244	4030011600	S.CER C1608 JB 1E 104K-T	B	100.1/36.2
C245	4030008680	S.CER C2012 JF 1C 105Z-T	T	104.2/47.6
C246	4030006860	S.CER C1608 JB 1H 102K-T	T	22.9/55.3
J1	6510018040	CON 52330-1217		
J2	6510018040	CON 52330-1217		
J4	6510025940	CON PJ-3047S <XIN>		
J5	6510014961	S.CON B2B-ZR-SM4-TF(LF)(SN)	T	22.9/60
J6	6510014961	S.CON B2B-ZR-SM4-TF(LF)(SN)	T	13.7/71.7
W5	7120000470	JUM ERDS2T0		
W6	8900015130	CAB OPC-1131A <TJM>!		
EP1	6910012350	S.BEA MMZ1608Y 102BT	B	69/34.8
EP2	6910012350	S.BEA MMZ1608Y 102BT	B	71.6/34.8
MP1	8410002380	S.HEA 2399 HEATSINK Y555	B	32.6/67.7

M.=Mounted side (T: Mounted on the Top side, B: Mounted on the Bottom side)
S.=Surface mount

BOARD LAYOUTS

The combination of top side and bottom side of this page shows the actual configuration of P.C. board.

• MAIN UNIT (TOP VIEW)

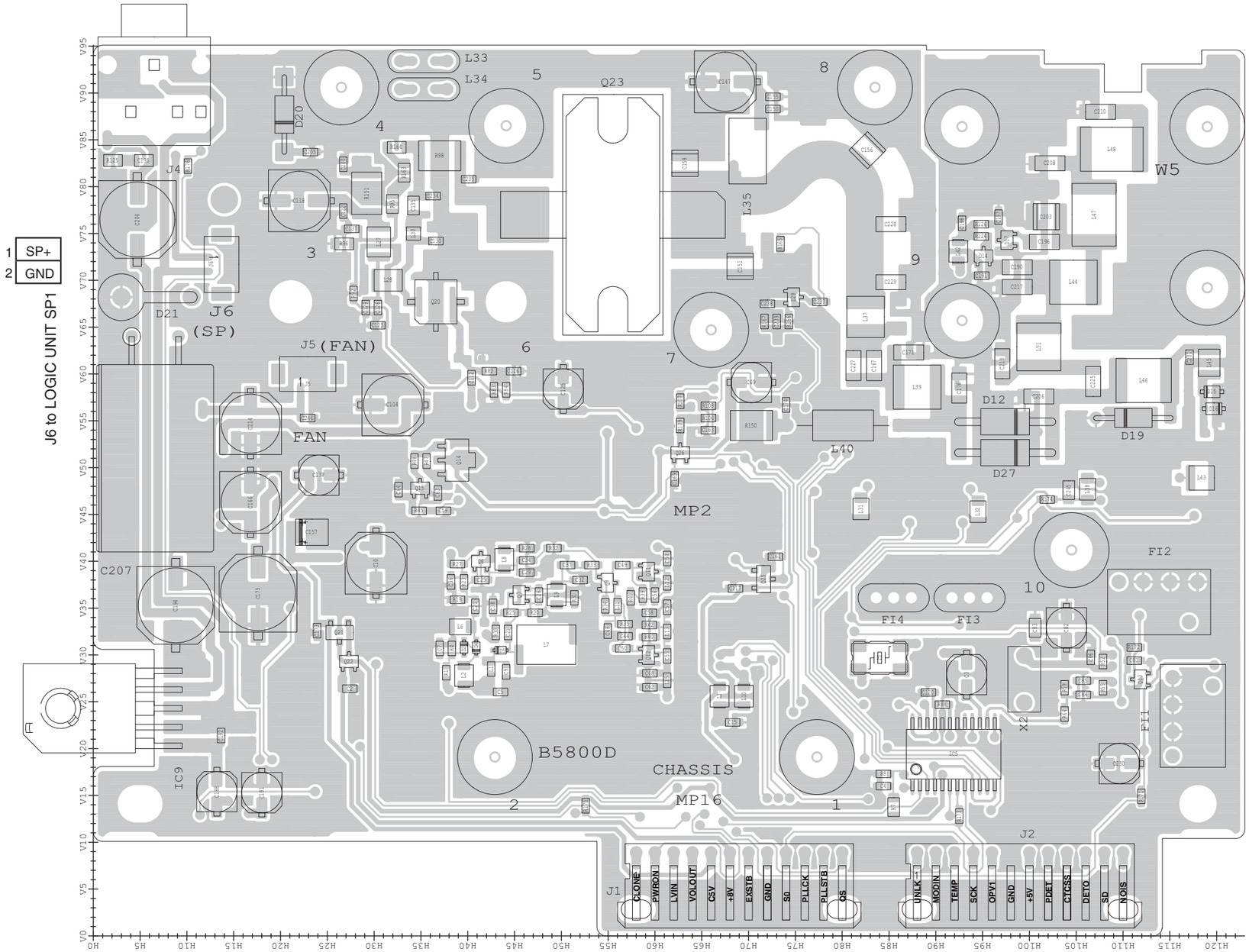

• LOGIC UNIT (TOP VIEW)

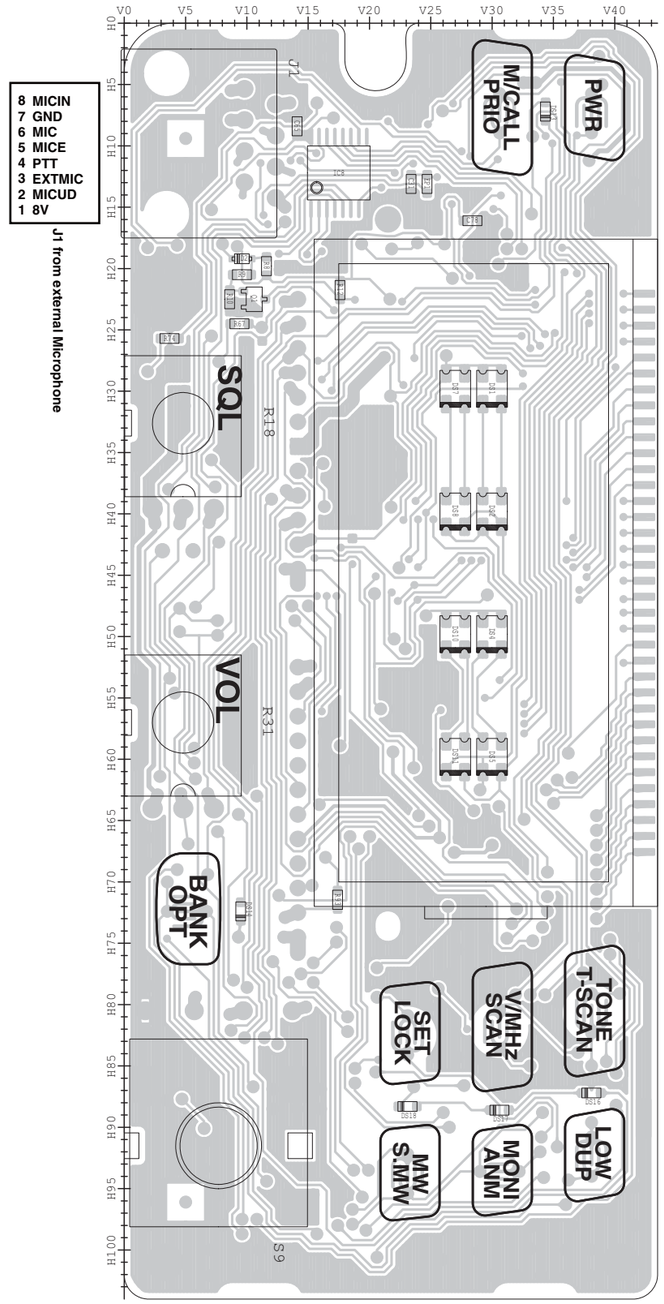

The combination of top side and bottom side of this page shows the actual configuration of P.C. board.

• LOGIC UNIT (BOTTOM VIEW)

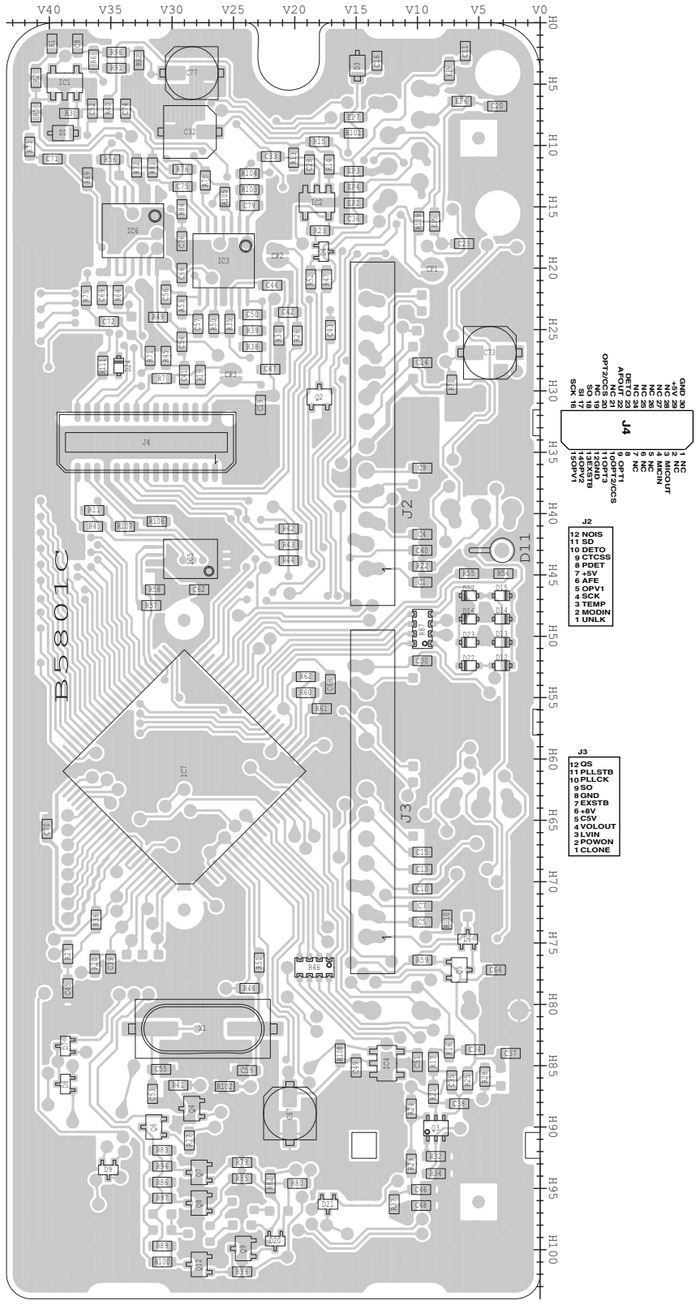

• MAIN UNIT (BOTTOM VIEW)

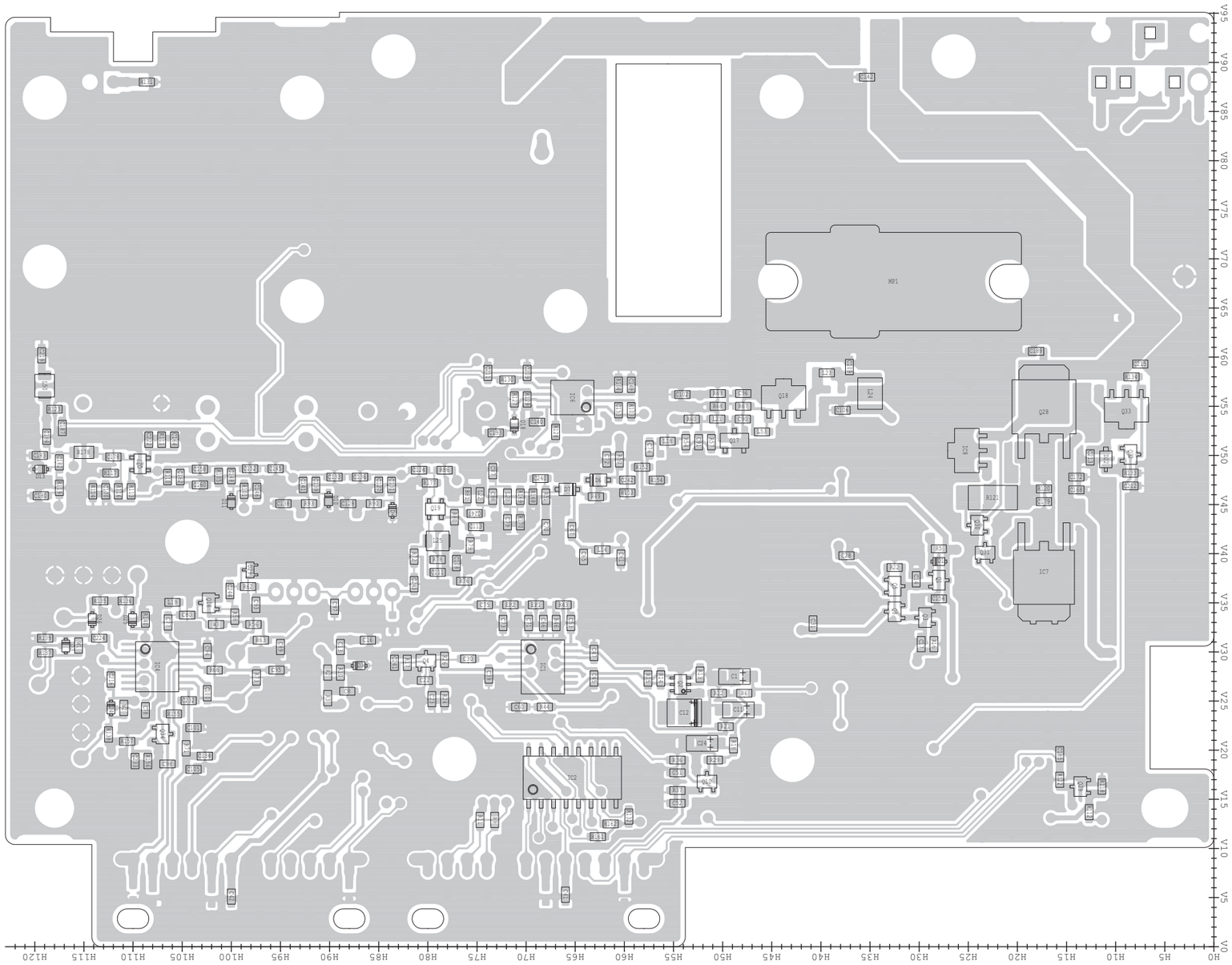

VOLTAGE DIAGRAM

LOGIC UNIT

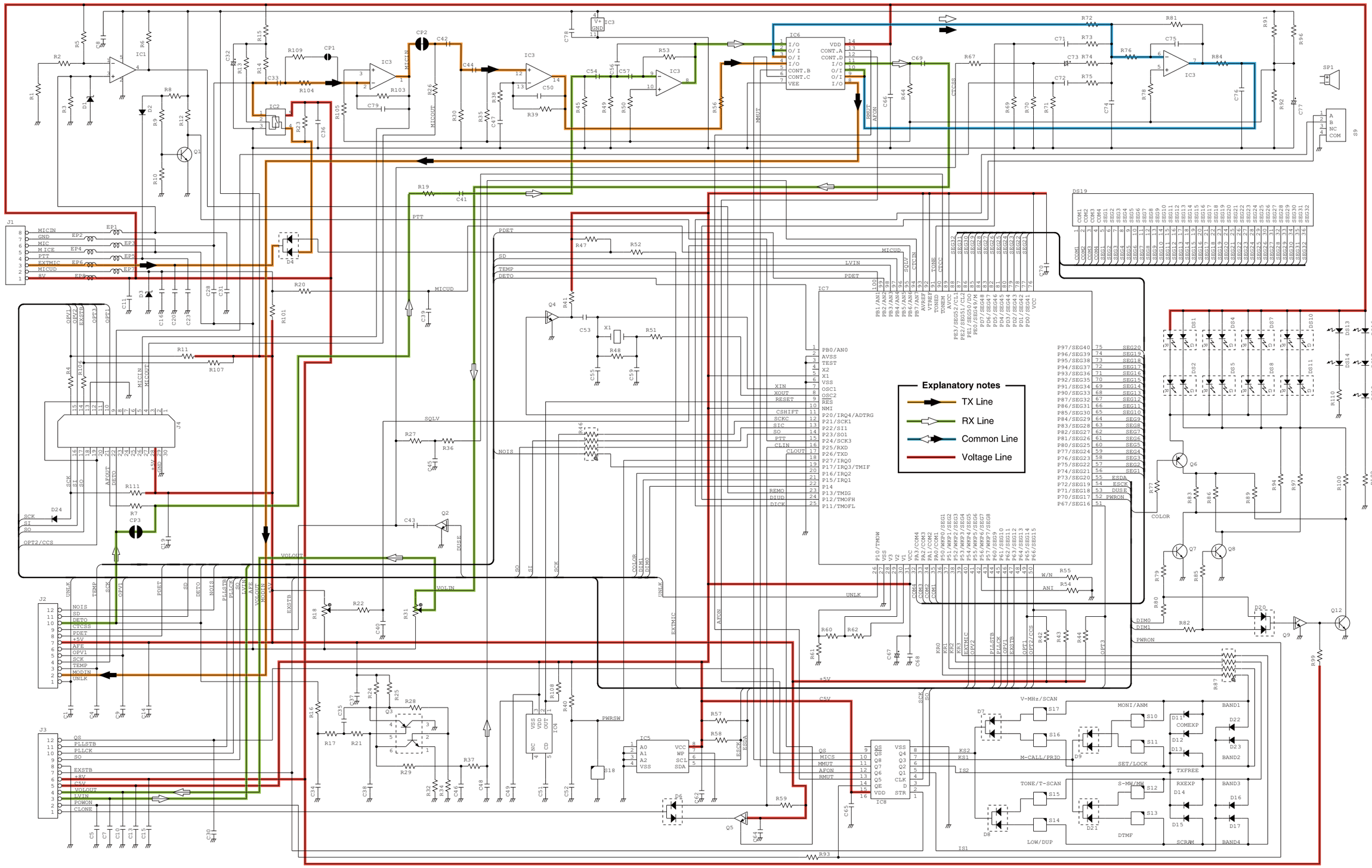

NOTICE: Refer to the PARTS LIST for the value and name of each component.

MAIN UNIT

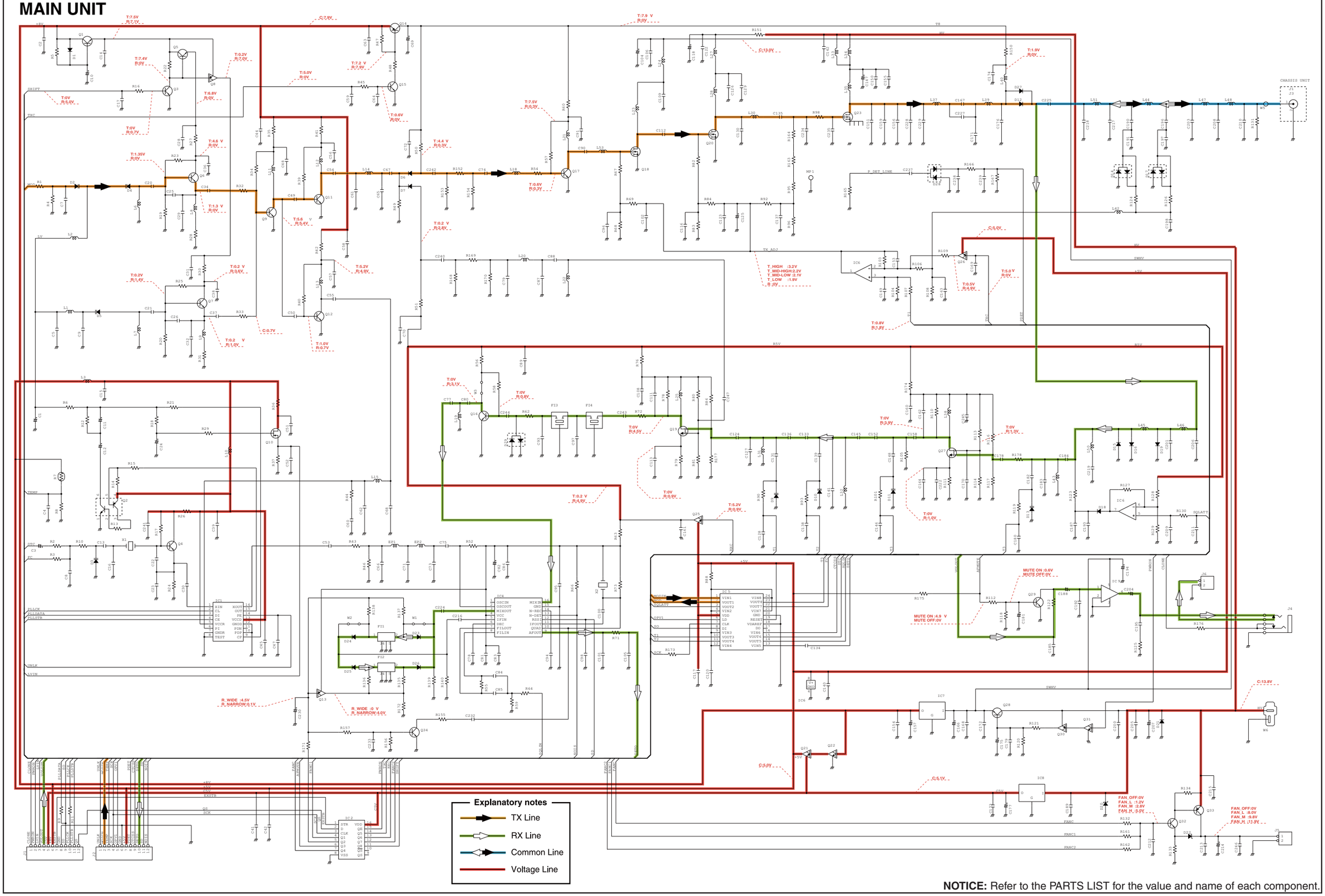

NOTICE: Refer to the PARTS LIST for the value and name of each component.